Fundamentals of Water Heating

Training

MANUAL

Rheem® RUUD®

Fundamentals of Water Heating Training Manual

Table of Contents

INTRODUCTION 3
WATER HEATER SAFETY 3
WATER CHEMISTRY 5
ANODE RODS AND CATHODIC PROTECTION 9
MILKY WATER AND DISSOLVED GASSES 11
SMELLY WATER AND THE ROTTEN EGG ODOR 12
CHLORINATION OF WATER HEATER TANKS 13
DIAGNOSING YOUR WATER PROBLEM 14
OPEN AND CLOSED WATER HEATER SYSTEMS 15
THERMAL EXPANSION 16
TEMPERATURE AND PRESSURE RELIEF (T&P) VALVES 18
PLUMBING CROSS OVER 20
HOT WATER AVAILABILITY AND CONSUMPTION FACTORS 21
DRAW TEST AND FLOW RATES 23
FIRST HOUR DELIVERY 24
SIZING OF A RESIDENTIAL WATER HEATER 26
ENERGY FACTOR 28
VACATIONS AND LONG TERM IDLE TIME 28
SUBMERGED WATER HEATERS 29
INSTALLATION - SERIES AND PARALLEL 29
SERIES INSTALLATION 30
PARALLEL INSTALLATION 31
PERCENTAGE OF HOT AND COLD WATER MIX 32
FORMULAS AND FACTS 34
GLOSSARY 37

Index of Figures

FIG 1 - SCALDING WARNING 3
FIG 2 - FLAMMABLE VAPORS WARNING 4
FIG 3 - WATER HARDNESS 6
FIG 4 - SEDIMENT BUILD-UP 7
FIG 5 - NEW ANODE ROD 9
FIG 6 - PARTIALLY SACRIFICED ANODE ROD 10
FIG 7 - FULLY SACRIFICED ANODE ROD 11
FIG 8 - TANK WITH BULGED BOTTOM 16
FIG 9 - THERMAL EXPANSION TANKS 17
FIG 10 - TEMPERATURE & PRESSURE RELIEF VALVE 18
FIG 11 - T&P VALVE CUTAWAY VIEW 19
FIG 12 - PROPER T&P VALVE LOCATIONS FOR RESIDENTIAL OR COMMERCIAL WATER HEATERS 19
FIG 13 - SERIES INSTALLATION 30
FIG 14 - PARALLEL INSTALLATION 31

Index of Tables

TABLE 1 - SCALDING 3
TABLE 2 - PRESSURE BUILD UP IN A CLOSED SYSTEM 16
TABLE 3 - SHOWER TIME AVAILABLE 23
TABLE 4 - DRAW TEST AND FLOW RATES 24
TABLE 5 - WATER HEATER RECOVERY RATES IN GALLONS PER HOUR 25
TABLE 6 - SAMPLE PEAK HOUR DEMAND CALCULATION 26
TABLE 7 - PEAK HOUR DEMAND CALCULATION BLANK WORKSHEET 27
TABLE 8 - PERCENTAGE OF HOT AND COLD WATER MIX 32

RHEEM MANUFACTURING COMPANY

WATER HEATER DIVISION

Technical Support Line
Service Department
1-800-HEATER3
1-800-432-8373

2600 Gunter Park Drive East
Montgomery, AL 36109-1413
FAX (334) 260-1341
Email:Techserv@rheem.com

Question, comments, or suggestions for this manual may be
directed to the Technical Training Administrator.

Copyright 8 2000, Rheem Manufacturing Company, Water Heater Division.

! ! Warnings and Cautions ! !

Before inspecting, diagnosing, repairing or operating any water heater, be sure to examine all of the safety and warning labels on the tank. Follow the instruction on these warning labels. Read and understand the Use and Care Manual that was shipped with the water heater. Failure to do so can result in unsafe operation of the water heater resulting in property damage, bodily injury, or death. Should you have any problems reading or following the instructions in the Use and Care Manual, seek the help of a licensed and qualified professional.

INTRODUCTION

This is a training manual, not a job site service manual; nor a parts manual. The intent of this manual is to train users of residential or commercial water heaters using gas or electricity as a fuel source. This manual does not assume any particular user liability, skill level, experience or expertise. The terms and component parts used in this manual are current manufactured items or vendor provided items used in Rheem water heaters. Finally, we encourage all users to exercise good common sense and check your local plumbing, gas and electrical codes.

WATER HEATER SAFETY

Here are some important safety issues to consider when servicing or repairing a water heater.

Scalding

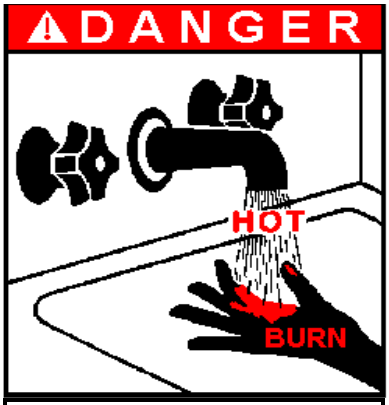

Water temperature over 125ºF can cause severe burns instantly or death from scalds.

Children, disabled and elderly are at highest risk of being scalded.

See Instruction manual before setting temperature at water heater.

Feel water before bathing or showering.

Temperature limiting valves are available, see manual.

Fig 1 - Scalding Warning

Water temperatures over 125 degrees Fahrenheit can cause severe burns instantly or death from scalds. Children, disabled and elderly are at the highest risk of being scalded and may require a thermostat setting of 120 degrees or lower to prevent contact with "HOT" water. Safety and energy conservation are factors to be considered when selecting the water temperature setting of a water heaters thermostat. It will take less than five seconds to produce a serious burn if the water temperature is 140 degrees. Maximum water temperatures occur just after the water heater has recovered (heated all the water in the tank to the thermostat setting). To find the hot water temperature being delivered, turn on a hot water faucet, place a thermometer in the hot water stream and read the temperature on the thermometer. You may also consider installing thermostatically controlled shower and tub valves which reduce the water temperature to a safer level of 115 degrees or less.

Table 1 - Scalding

Temperature	Time to Scald
125° F	1 1/2 to 2 minutes
130° F	About 30 seconds
135° F	About 10 seconds
140° F	Less than 5 seconds
145° F	Less than 3 seconds
150° F	About 1 1/2 seconds
155° F	About 1 second

Table courtesy of Shriner's Burn Institute

Electrical Shock

Electric water heaters may pose a risk of electrical shock. When installed properly, all exposed wires to the thermostat and heating elements are protected and covered. The risk of shock exists when these service panels are removed to adjust the thermostat setting or to reset the energy cut off switch. Power supply must be shut off before removing access panels prior to adjusting thermostat(s) or resetting the temperature limiting control.

Flammable Vapors

Vapors from flammable liquids will explode and catch fire causing death or severe burns. Do not use or store flammable products such as gasoline, solvents or adhesives in the same room or area near the water heater. Flammable vapors cannot be seen, are heavier than air, travel a long way on the floor, and can be carried from other rooms to the pilot flame by air currents. Keep flammable products far away from the heater, in tightly closed and approved containers, and out of reach of children. Do not install a gas water heater where flammable products will be stored or used unless the main burner and pilot flames are at least eighteen inches above the floor. This will reduce, but not eliminate, the risk of vapors being ignited by the main burner or pilot flame.

Gaseous Fuels

Both liquid petroleum and natural gas have an odorant added to help in their detection. Some people may not be physically able to smell or recognize this odorant. If you are not sure or unfamiliar about the smell associated with LP or natural gas, ask your local gas supplier.

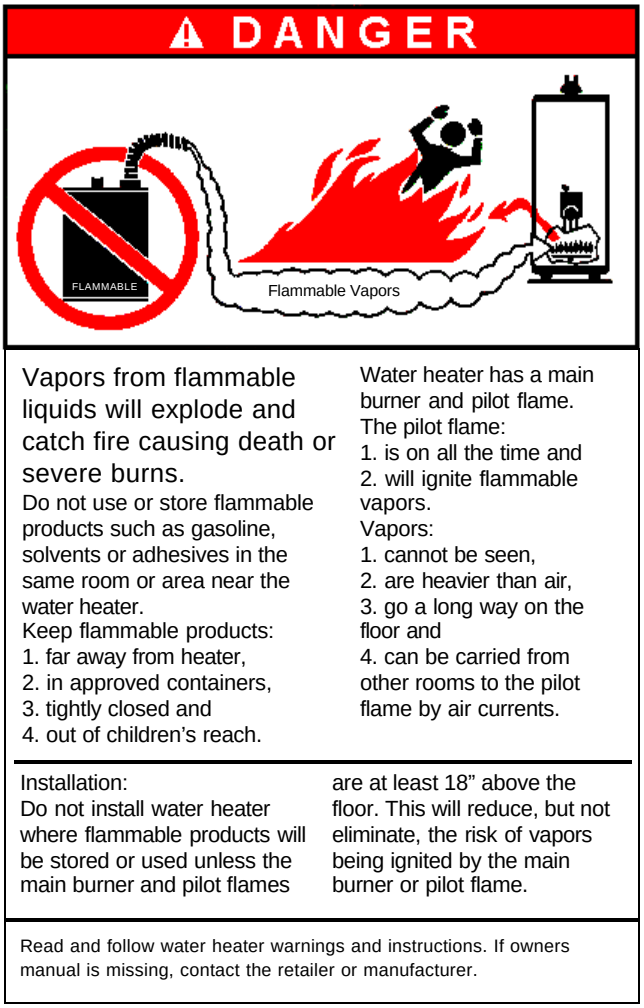

Fig 2 - Flammable Vapors Warning

If you smell gas, leave the house immediately and make sure your family and pets leave also. Leave the doors open for ventilation. Go to a neighbors house and call your gas supplier, a qualified service agency or the fire department. Keep the area clear until the service call has been made, the leak corrected and a qualified agency has determined the areas to be safe.

See the Use and Care Manual included with each water heater for additional safety information.

WATER CHEMISTRY

All of the water that we use in our homes comes from either a ground water source or a surface water source. Ground water sources include a well; surface water sources include lakes, streams or reservoirs. According to the U.S. Geological Survey in 1990, about 44% of domestic water comes from ground sources. The remaining 56% comes from a surface water source.

Each person uses an average of about 100 gallons of water per day. This includes baths, showers, cooking, clothes and dish washing, grooming and waste disposal. The largest user of household water is the toilet followed by the shower.

Toilets	35 gallons	Baths/showers	28 gallons
Clothes washing	18 gallons	Faucets	13 gallons
Dishwashing	3 gallons		

With the exception of the toilet flush, all of the these activities either use hot water or have the potential to use hot water. That means that 64% of our average water usage involves the hot water heating system in our homes.

Hot water is a complex environment that enhances the existing capability of naturally occurring minerals to cause corrosion, scale deposits and odor problems. These minerals are already present in the cold water supply. When water is heated, it acts differently than cold water. For example:

Water changes volume (expands) when heated, and it is virtually incompressible. We all know that when water freezes, it expands and may burst household plumbing fixtures and pipes. Water also expands when it is heated. That is why water heaters have a Temperature and Pressure Relief valve installed. One of the common effects of such expansion is that hot water backs into the cold water supply lines of the water heater or causes the T&P valve to dribble if the system is closed.

Heating water releases gasses present in the water. Water naturally contains dissolved gasses such as oxygen, chlorine, carbon dioxide and hydrogen sulfide. At a given pressure, such as a normal 40 PSI household, the amount of gas that water can hold is less as the temperature increases. This is exactly what happens inside a water heater. With a normal household pressure, the water is heated. The heated water releases the gas causing the faucet to ‘spit’ when there is a hot water draw. One of the common occurrences may be a complaint of ‘milky water’ from the tap. Allowing the water to stand for several minutes will cause the bubbles to rise into the atmosphere and the water will turn clear. The analogy is to boil a pot of water. As the cold water is heated, air bubbles form on the side of the pot. These air bubbles are the

gasses formed by the application of heat to the water. The same thing happens, on a smaller scale, inside a water heater.

Heating water causes existing minerals to settle faster and in larger quantities. As the water is heated, it becomes lighter and less dense. The naturally occurring solids, although not visible to the eye, will settle at a faster rate. The result is sediment collecting at the bottom of the tank. Routine draining maintenance will help reduce the collection of sediment. If a homeowner does not periodically drain and flush the tank, the sediment will harden on the bottom the tank. The result is a clogged drain valve and reduced efficiency of the heater, especially in gas water heaters.

Hot water is more corrosive than cold water. Water is a universal solvent and will naturally corrode (or dissolve) most materials. This corrosion is nothing more than a chemical reaction (steel + water + oxygen = rust). Chemical reactions are usually accelerated with the application of heat. This is also true of corrosion reactions in hot water. The rate of corrosion approximately doubles from 140° F to 160° F; and doubles again from 160° F to 180° F. With these few ideas in mind, lets investigate the more common complaints in a hot water system.

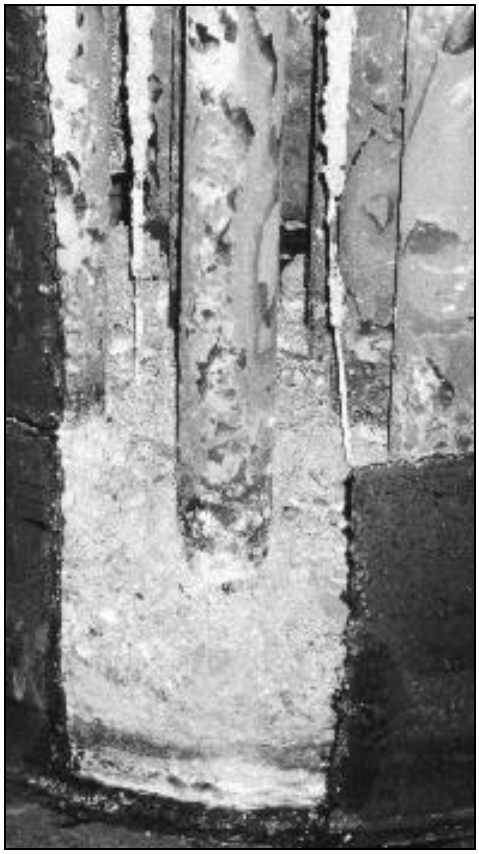

Fig 3 - Water Hardness

pH Acidity vs Alkalinity

The term "pH" is used to indicate acidity or alkalinity of a given solution. It is not a measure of the quantity of acid or alkali, but rather a measure of the relationship of the acid to the alkali. The pH value of a solution describes its hydrogen-ion activity. The pH scale ranges between 0 and 14.

Acidic [0]=========[7]==========[14] Alkaline

Typically all natural waters fall within the range of 6.0 to 8.0 pH. A value of 7.0 is considered to be a neutral pH. Values below 7.0 are acidic and values above 7.0 are alkaline. Water with a pH value of 3.5 or below, generally contains mineral acids such as sulfuric or hydrochloric acid.

Water Hardness

Hard water is found in more than 85% of the United States. Water hardness is due to the presence of two dissolved minerals - calcium and magnesium. So common are these two minerals in water that practically no supply can be found that does not contain at least one or two

grains per gallon. The hardness of a water supply is determined by the content of calcium and magnesium salts. Calcium and magnesium combine with bicarbonates, sulfates, chlorides, and nitrates to form these salts. Mineral concentrations may be expressed as grains per gallon or parts per million. When you have high levels of calcium and magnesium in your water more scrubbing power and more detergent is required to clean and wash clothing. The following are some of the tell-tale signs of hard water:

Difficult to remove soap scum on tubs, showers, basins and faucet fixtures.
Reduced sudsing and cleaning capabilities of some soaps and detergents.
Scale build up around faucet fixtures and on the inside of a water heater

Scale build up is one of the most serious problems caused by hard water mineral deposits. These deposits, commonly called lime build up, may clog water pipes, collect in the bottom of water heaters or collect on electrical heating elements immersed inside the water heater. The build up on the electrical heating elements will insulate the elements and reduce their efficiency. Eventually, the elements will fail. If this sediment is allowed to remain in the tank, it will gradually sink to the bottom where it will harden into an insoluble scale. This will lead to a reduction in the efficiency of the heater, clogging of the drain valve and may lead to eventual tank failure.

Fig 4 - Sediment Build-up

Hydrogen Sulfide

Hydrogen sulfide (H_2S) is a gas present in some waters. Hydrogen sulfide is a gas that is present in two forms, depending on the pH of the water. At higher pH levels H2S is present in the alkaline sulfide form and at lower pH levels it is present in the gaseous form. There is never any doubt when it is present due to its offensive '"rotten egg" odor in concentrations as low as one part per million. A common mistake is incorrectly determining the source of the sulfur. Hydrogen sulfide in most areas is usually present in the source water. Hydrogen sulfide is present in the incoming cold water supply and normally found only in ground water. Hydrogen sulfide gas can produce a favorable condition for the growth of organisms referred to as 'sulfate reducing bacteria'. This favorable condition is enhanced with the application of heat, such as in a water heater. The smell is most noticeable with the first hot water draw in the morning or maybe when you get home from work. In this instance, the smell can be produced in the hot water system when sulfates are converted to sulfide by bacterial reduction. These bacteria are known as Desulfovibrio Desulfuricans. It is possible to completely remove the hydrogen sulfide at the point-of-entry only to have it re-formed in the water heater. To determine if the water heater is involved, run the cold water only inside the house - preferably in a shower stall. If no

odor is detected, turn off the cold water and run the hot water only. The presence of sulfur in the hot water, but not the cold, indicates that bacterial activity is the cause of the sulfur smell.

Iron

Iron is a common element in nature. It is not surprising that most surface or ground water contains some iron. Natural iron usually occurs as an insoluble oxide, but the ground water recharge process collects iron in a soluble form that is dissolved in water. The water is clear when drawn but turns cloudy when it comes in contact with air. The air oxidizes the ferrous iron and converts it to ferric iron. Ferric iron, or ferric hydroxide, is visible in the water when drawn; hence the name "red water iron". Heme iron is organically bound iron complexed with decomposed vegetation. The organic materials complexed with the iron are called tannins or lignins. These organics cause the water to have a weak tea or coffee color. Certain types of bacteria use iron as an energy source. They oxidize the iron from its ferrous state to its ferric state and deposit it in the slimy gelatinous material which surround them. These bacteria grow in stringy clumps and are found in most iron bearing waters.

At 0.3 parts per million or greater concentrations, iron can produce brown or red stains on plumbing fixtures, laundry or masonry surfaces. In higher concentrations, it can produce an unpleasant metallic taste in the water. Iron can also produce favorable conditions for the growth of “iron bacteria”. Left untreated, these bacteria results in a jelly-like slimy mass. This mass can cause clogged pipes and filter screens and produce a foul tasting water. Other indications of the presence of iron are:

Black or rust colored particles that settle to the bottom of a container.
Water appears rusty or has a red or yellow color when drawn from a faucet.
Slimy brown or red film in plumbing fixtures, especially inside a toilet tank.

Service tip: Check the inside of a porcelain toilet tank for colored stains. The color of the stains may indicate the mineral content of the water.

Manganese

Manganese is rarely found alone in a water source, but is usually paired with iron. At concentrations of 0.05 parts per million, manganese can cause black staining of fixtures, laundry or masonry. It is hard to treat because of the complexes it can form which are dependent on the oxidation state, pH, bicarbonate-carbonate-OH ratios, and the presence of other minerals, particularly iron. Concentrations higher than 0.05 mg/l cause manganese deposits and staining of clothing and plumbing fixtures. The stains are dark brown to black in nature. The use of chlorine bleach in the laundry will cause the stains to set. The chemistry of manganese in water is similar to that of iron. High levels of manganese in the water produces an unpleasant odor and taste. Organic materials can tie up manganese in the same manner as they do iron, therefore destruction of the organic matter is a necessary part of manganese removal. Deposits of manganese can collect in plumbing systems and produce a dark brown or black sediment and black turbidity (suspension of particles) in the water. Like iron, manganese can also produce favorable growth conditions for “manganese bacteria” and clog screens and plumbing lines. Together with iron, manganese bacteria cause a general deterioration or water quality by creating taste, odor and staining problems.

Turbidity

Turbidity is the term given to anything that is suspended in a water supply. It is found in most surface waters, but usually doesn't exist in ground waters except in shallow wells and springs after heavy rains. Turbidity gives the water a cloudy appearance or shows up as dirty sediment. Undissolved materials such as sand, clay, silt or suspended iron contribute to turbidity. Turbidity can cause the staining of sinks and fixtures as well as the discoloring of fabrics. Turbidity can be particles in the water consisting of finely divided solids, larger than molecules, but not visible by the naked eye.

Odors & Taste

Taste and odor problems of many different types can be encountered in water that is heated. Troublesome compounds may result from biological growth or industrial activities. The tastes and odors may be produced in the water supply, in the water treatment plant from reactions with treatment chemicals, in the distribution system, or in the plumbing of consumers. Tastes and odors can be caused by mineral contaminants in the water, such as the "salty" taste of water when large quantities of chlorides are present, or the "rotten egg" odor caused by hydrogen sulfide. Moderate concentrations of algae in the water can cause it to have a "grassy", "musty" or "spicy" odor. Decaying vegetation is probably the most common cause for taste and odor in surface water supplies. In treated water supplies chlorine can react with organics and cause odor problems.

ANODE RODS AND CATHODIC PROTECTION

Corrosion can be defined as the destructive attack of a metal by an electrochemical reaction with its environment. Steel exposed to moisture and oxygen will rust and corrode. Corrosion is defined as the ‘eating away’ of metal by electrochemical means. There are four main factors affecting water’s ability to corrode:

1. Acidity - Water is made acidic by naturally occurring dissolved gases such as carbon dioxide and hydrogen sulfide.
2. Temperature - Temperature speeds up the corrosive process. Chemists have a rule of thumb that for every 49°F increase in temperature, chemical reactions increase two fold.
3. Electrical conductivity - The more dissolved mineral solids in the water, the greater its ability to carry electrical current. When dissimilar metals are in the water:
   Electrical current flows between metals
   One of the metals gradually corrodes faster than the other
4. Amount of dissolved oxygen - Free oxygen dissolved in the water promotes corrosion.

Fig 5 - New Anode Rod

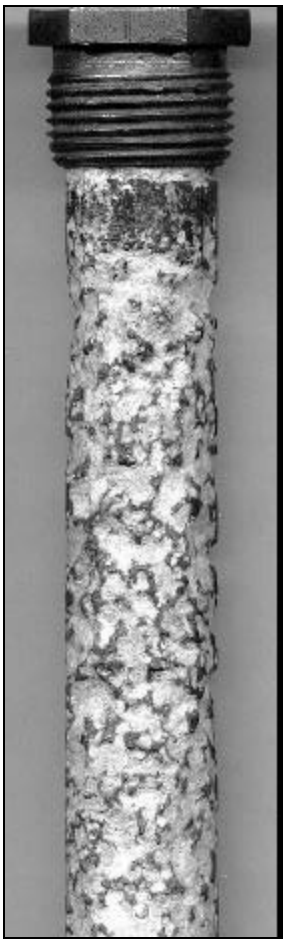

Dissimilar metals are present in the interior steel tank surfaces of all water heaters in several forms such as the drain nipples, heating elements, inlet and outlet nipples and the anode rod. These metals, and others present in the water itself, combined with the oxygen content of the water and heat present establish an environment conducive to corrosion. Some definitions that may be helpful are:

Electrolysis- An electromagnetic field produced by the movement of water in a confined space. As water is heated, the hot water rises to the top of the tank. Obviously, the inner storage tank is a confined space.

Cathodic protection - Minute electrical current produced by the heating of water is known as electrolysis. The inner tank of the water heater acts as a magnet or receiver of this electrical circuit. As the water is heated, metals inside the tank (steel tank, brass fittings, anode rod) attract the electrical current. By designing an anode rod more conductive of electricity than the steel tank, the steel tank is protected. The process of the sacrificial anode rod is known as cathodic protection.

Fig 6 - Partially Sacrificed Anode Rod

Here is a portion of a galvanic series chart showing the reaction of metals in relationship to its negativity or ability to conduct electricity. The more negative (or anodic) the metal is, the greater the ability to conduct electricity before the steel water heater tank.

Corroded end (anodic or corroding state)
(-) Magnesium
Zinc
Aluminum
Steel or Iron (tank construction)
Lead
Tin
Brasses
Copper
Bronzes (+)
Protected end (cathodic or non-corroding)

You can see from the chart that magnesium and aluminum, standard metals in anode rods, will react before a steel water tank. Service conditions have also accelerated water heater corrosion problems. The increasing demand for hot water coupled with the trend toward higher temperatures have suggested corrosion increases as temperature and water throughput increases.

In a water heater, corrosion is protected by a glass (actually a porcelain enamel) lining in the steel tank, and the use of auxiliary anode rods. During the manufacturing process, the inside water tank and both the top and bottom heads are sprayed with a liquid glass material. Glass technology allows the glass to adhere to the steel interior, and is accomplished by applying a precise thickness of glass mixture to the tank and heating for a precise time period. This material is fired in a furnace, and when cooled, resembles a porcelain lining. This glass provides a long life to the steel tank; otherwise the tank would fail or corrode in a relatively short time. Every glasslined water tank, no matter how carefully it is manufactured, has some bare metal exposed. This is due to the inability to effectively cover sharp corners and the radius around the fittings. There is a chance that a crack or chip in the porcelain lining will allow the water to come in contact with the steel tank. Over time, water, a universal solvent that becomes more aggressive with temperature, breaks down the interior tank lining. This will create conditions for corrosion, pin holes in the tank and finally tank failure.

Cathodic protection is accomplished in the glasslined water heater through the use of an auxiliary magnesium anode with a patented Rheem resistor. Due to the relative position of magnesium to steel in the electromotive series of metals, magnesium will corrode producing an abundance of electrons which flow (much the same as an electrical current) to the exposed steel surface and maintaining it in the electro-negative state. As current flow takes place, the anode rod attracts the electro magnetic current and reacts chemically to corrode at a rate faster than the steel inner tank. This process stops tank corrosion by substituting the sacrificial magnesium anode rod in place of the steel tank. As long as the magnesium anode rod remains in the tank, in an active state, there will be no corrosion of the minute areas of exposed steel inside the tank.

The life of the anode, in turn, depends on water temperature, amount of water used, and the quality of the glass lining. However, the most important factor in the life of the anode rod is the water chemistry and the hardness or softness of the water. Also check the manufacture and installation date of the water heater. If the heater is more than five (5) years old, and the anode rod has not been replaced, inspect the anode rod. The anode should be replaced when there is six (6) inches or more exposed core wire at either end.

Fig 7 - Fully Sacrificed Anode Rod

MILKY WATER AND DISSOLVED GASSES

Gasses such as oxygen, chlorine, carbon dioxide, hydrogen sulfide and others are soluble in water. In fact, water is made up of two gasses, Hydrogen and Oxygen (H_2O). The amount of gas that water can hold is decreased as the temperature of the water increases. For example, a pot of cold water is placed on a stove to boil. When the pot is first put on the stove, there are no

bubbles. As the water is heated, bubbles form on the bottom and sides of the pot. This is the perfect example of gasses, naturally present in the water, being released as the temperature of the water increases.

Another point that is noteworthy is that hot water from a faucet may also expel these naturally occurring gasses. One of the more common occurrences is the phenomenon called milky water. The hot water, when drawn into a clear glass, may appear discolored or chalky. Allow the glass to stand for a few minutes and the water becomes clear. By allowing the water to stand for several minutes, the small gas bubbles, that give the appearance of milky water, will dissipate and the condition will clear. Aerated faucets may help in reducing the likelihood of this happening.

In the plumbing field, we should also be aware of a couple of other effects of this gas release. As pressure inside a plumbing system increases, the waters ability to retain dissolved gasses increases. The higher the pressure, the more dissolved gasses in the water. Significant pressure drops may occur at the inner radius of elbows and fittings under high pressure. This rapid pressure drop may release gas bubbles. These gas bubbles have an abrasive effect on piping and are an important factor in corrosion-erosion.

The release of dissolved gas also creates air pockets and air locks in plumbing systems. The spurts of air or gas when opening a hot water faucet can be attributed to the release of dissolved gasses in the water. Other gasses, such as hydrogen, can be a by-product of severe corrosion activity in a plumbing system.

SMELLY WATER AND THE ROTTEN EGG ODOR

The incidence of rotten egg odor or black water in hot water lines is due to the reaction of sulfates and micro-organisms in the water. This condition is a water problem, rather than a water heater problem. A quick check for the cause of the odor is to draw enough hot water to notice the odor. Then move to another faucet, or wait until the smell dissipates, and draw cold water. The source of the odor may be in the cold water supply, such as untreated rural water systems or well water.

For many years the regular magnesium anode was and is the standard anode for use in water heater tanks. In general, it is a very good anode, however, the performance is dependent on water chemistry. In waters where the conductivity is low, the anode operates at very low current levels. Conversely, where the water conductivity is high, an excessive amount of current is produced with inefficient operation. In addition, some of these waters have excessive sulfate content along with various strains of sulfate reducing bacteria. These bacteria, harmless to health, will grow in the presence of the highly active magnesium anode and will produce hydrogen sulfide gas, utilizing the hydrogen ion from the anode cathode reaction. The greater activity of the anode, the greater amount of the hydrogen ion and hydrogen sulfide gas. These bacteria can be killed with adequate additions of chlorine and or ozone. This will usually eliminate the odor problem.

Although there is very little literature associating odors and sulfate reduction with magnesium, there is reference to sulfate-reducing bacteria known as **desulfovibrio**. These bacteria cannot grow in the presence of atmospheric oxygen, which may account for their not being noticed in cold water supplies. When the same water is heated, they become noticeable.

There are two ways to eliminate an odor or black water problem. They are listed in the order of preference.

1. Chlorination - by means of a continuous chlorine feeder; or periodic flushing with a common household bleach. This process is 100% effective only if a continuous chlorine feeder is installed.
2. Install a new R-TECH anode rod after the water heater has been flushed with household bleach. This process may not be 100% effective because bacteria is still allowed to grow inside the tank.

CHLORINATION OF WATER HEATER TANKS

1. Turn off the manual electrical switch or shut off the gas supply.
2. Close the cold water inlet valve at the heater.
3. Open a nearby hot water faucet and the T&P valve to relieve tank pressure.
4. Drain the heater of enough water to compensate for the bleach. Use a hose connected to the drain valve if an open drain is not adjacent to the heater.
5. Remove relief valve, anode rod or disconnect the hot water outlet pipe from the heater.
6. Pour one gallon of bleach for every 30 gallons of water heater tank capacity. Use the relief valve, anode rod or hot water outlet pipe opening. Re-pipe the heater and close the T&P valve.
7. Open the cold water inlet valve at the heater and fill the tank with water. Observe the water level through the closest hot water faucet. Close inlet valve when the tank is full.
8. Leave the bleach mixture in the heater for one hour.
9. After one hour, open <u>all</u> the hot water faucets and allow the bleach mixture to clean the hot water supply pipes. Drain the remaining bleach mixture from the tank through the heater drain valve.
10. Close the heater drain valve, make sure the cold water inlet valve is open, and completely fill the tank with fresh water. Leave the water in the tank for 15 minutes.
11. After 15 minutes, purge the hot water supply lines and drain the water from the tank through the heater drain valve. Close the drain valve. Check anode rod for serviceability; replace with a new R-TECH anode rod if there are signs of deterioration.
12. Make sure you purge all the air from the hot water lines from the open hot water faucets. Close the hot water faucet after all the air is out of the system.
13. Check for water leaks at all fittings used; repair as necessary.
14. Turn on the manual electrical switch or gas supply from step 1 above.
15. Check for normal water heater operation.

DIAGNOSING YOUR WATER PROBLEM

Does your water have a strange appearance?

	Potential Causes	Potential Contaminants	Suggested Treatment Options
Turbid or cloudy	organic or suspended matter;defective well screen;inadequate public treatment	dirt, sand, clay, silt, organic matter	contact local health agency or public water utility
Blue-green stains on sink or around fixtures	corrosive water reacting with brass and copper fittings	brass; copper	contact local health agency or public water utility
Brown-red stains or discolored clothing	naturally occurring iron in the water; iron bacteria leached from old iron pipes	Iron; rust	contact local health agency or public water utility
Yellowish color	water passing through peat soil and vegetation (well water)	tannins (humic acid); same stains as wet tree leaves have fallen on concrete	contact local health agency or public water utility
Black stains on fixtures or clothing	naturally occurring manganese usually found with iron	manganese	contact local health agency or public water utility
Blacking and pitting of stainless steel sinks	excess salt;improper treatment;excess chlorine	chlorine	contact local health agency or public water utility
Milky	excessive air or particles in the water	possible sediment in water heater	let water stand and it will go away;flush sediment from heater

Does your water have a strange taste?

	Potential Causes	Potential Contaminants	Suggested Treatment Options
Salty or brackish	salt water intrusion into water source	sodium; inorganic salts	contact local health agency or public water utility
Metallic taste	corrosive water causing leaching; naturally occurring high mineral content	iron; manganese	contact local health agency or public water utility
Alkali taste	corrosive water causing leaching; naturally occurring high mineral content (usually in private wells)	undisclosed minerals	contact local health agency or public water utility
Sharp chemical taste	industrial activities close by; waste disposal close by	semi-volatile organic compounds; herbicides; pesticides	contact local health agency or public water utility

Does your water have a strange odor?	Potential Causes	Potential Contaminants	Suggested Treatment Options
Musty or earthy	algae; vegetation	organic matter such as leaves	contact local health agency or public water utility
Chlorine	excess chlorine or inadequate de-chlorination	chlorine	contact local health agency or public water utility
Detergent	septic discharge into water supply	detergents	contact local health agency or public water utility
Rotten eggs	sewage; sulfate reducing bacteria	hydrogen sulfide gas;sulfates	contact local health agency or public water utility
Fishy, sweet or perfume	industrial chemicals; waste	volatile organics; semi-volatile organics	contact local health agency or public water utility
Oil or gas	gasoline or oil leaks into water supply	gasoline, oil, benzene	contact local health agency or public water utility

Does your water have a strange texture?	Potential Causes	Potential Contaminants	Suggested Treatment Options
Gritty or abrasive	defective well screen; inadequate public treatment	fine sand, grit	contact local health agency or public water utility
Scum or white deposits	elevated levels of calcium and magnesium salts	hard water	contact local health agency or public water utility;water softener

OPEN AND CLOSED WATER HEATER SYSTEMS

Water heater systems may be installed as either an ‘open’ or ‘closed’ system. Water in an ordinary water heater tank is under a certain pressure depending on the supply pressure in the system (the cold water supply pressure to the residence). As this water is heated, its volume increases. If there is no check valve, pressure reducing valve or other obstruction in the cold water line, the system is open and water pressure will back up into the cold water supply line. If enough pressure exists inside the water heater, the pressure will force water back into the municipal supply system. Therefore, in an open system, the water pressure in the water heater tank will always be equal to the supply pressure. Some municipalities are introducing codes that prevent this return to the city main system.

The presence of a check valve, backflow preventer, water pressure reducing valve, or closing the shut-off valve in the cold water line makes the plumbing system a closed system.

In this situation, the increased water pressure is trapped inside the heater tank and cannot back up or equalize into the cold water supply line. Being trapped, the pressure will become increasingly greater. Eventually, the pressure inside the water heater will exceed the limits of the Temperature & Pressure relief (T&P) valve and the valve will discharge. If the T&P valve is not installed or not operating an even more serious condition could develop. If the pressure inside the tank is not released, the tank may split a weld seam or rupture.

Fig 8 - Tank with Bulged Bottom

The following figures are from an actual test conducted expressly to point out the danger of what happens to water pressure when heated a closed system.

Water Temperature °F		Tank Pressure P.S.I
74		80
75		85
76		105
78		125
80	*T&P actuates about here*	145
82		175
85		225
88		275
90	*At this point the tank bottom will*	310
95	*start to reverse and eventually break a weld and leak.*	400
100		520

Table 2 - Pressure build up in a Closed System

Rheem water heater tanks are manufactured and tested to withstand a test pressure of 300 PSI and a working pressure of 150 PSI. A bulged bottom immediately indicates that the tank has been subjected to a pressure in excess of 300 PSI and is not covered by warranty.

THERMAL EXPANSION

When water is heated it expands. Reacting to physical law, water expands in volume as its temperature rises. In a 40 gallon water heater, water being heated to its thermostat setting will end up expanding to about 40.53 gallons when the desired temperature is reached. The extra volume created by this expansion must go somewhere.

Before the advent of cross connection control, expanded water that exceeded the capacity of the tank flowed back to the city main where it was easily dissipated. It was ‘open’ at the city side of the supply system. Today, with back flow preventers, water meter check valves and

pressure reducing valves without a bypass being installed, expanded water from a water heater cannot return to the city supply. It is now a 'closed' system and the expanding water has no place to go. Dangerous conditions exist during thermal expansion long before the temperature and pressure relief valve operates. Internal pressures repeatedly occurring during recovery periods can 'stress' the tank causing the tank welds and fitting connections to the tank to weaken.

Remember -

water + heat + pressure + closed system = potential explosion !

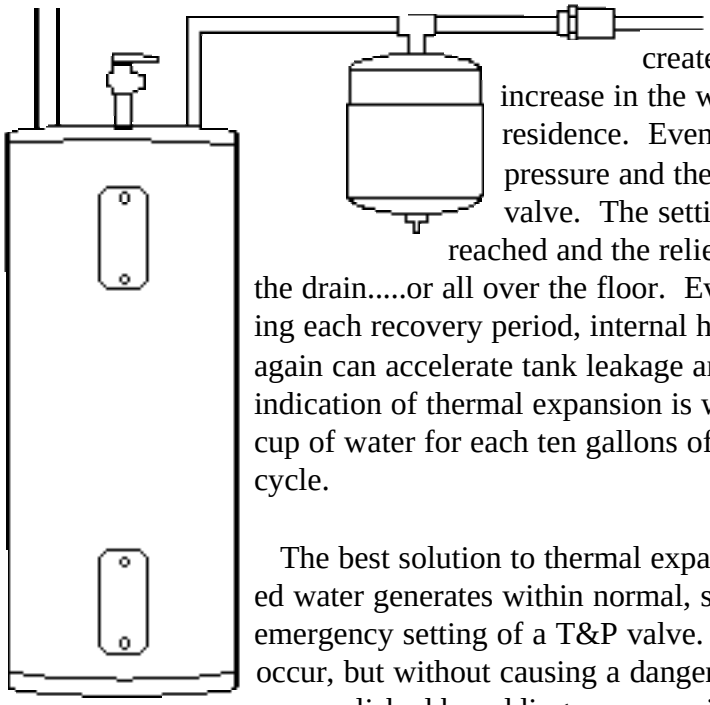

As a result, the expanding water creates a rapid and dangerous pressure increase in the water heater and system piping inside the residence. Eventually, the combination of temperature, pressure and the closed system will activate the T&P valve. The setting on the safety relief is quickly reached and the relief valve opens, losing heater water down the drain.....or all over the floor. Even though the T&P valve operates during each recovery period, internal high pressures occurring over and over again can accelerate tank leakage and shorten water heater life. A good indication of thermal expansion is when the T&P valve releases about one cup of water for each ten gallons of heater capacity with each heating cycle.

The best solution to thermal expansion is to control the pressure the heated water generates within normal, safe operating range, well below the emergency setting of a T&P valve. This will allow thermal expansion to occur, but without causing a dangerous increase in pressure. This is accomplished by adding an expansion tank. As the water temperature increases, the expanded water is received by the expansion tank. As the temperature and pressure reaches its maximum, the diaphragm flexes against the air cushion (air is compressible) to allow for increased water expansion. By adding a Rheem THERM-X-GUARD™ thermal expansion tank with a sealed in compressible air cushion, space is provided to store and hold the additional expanded water volume. When the water is heated the expanded volume is consumed by the expansion tank. When hot water is used in the system, the expansion tank returns the water back into the system for use.

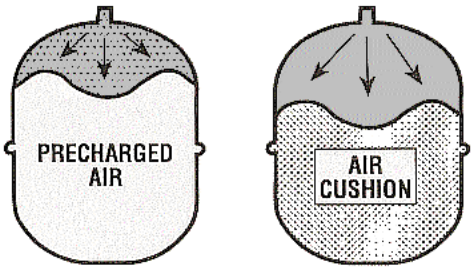

Fig 9 - Thermal Expansion Tanks

Service Tip: Thermal expansion tank pressure must be 10-15 psi above service pressure. There are sizing issues when selecting the proper expansion tank. Consult the expansion tank manufactures specifications.

TEMPERATURE AND PRESSURE RELIEF (T&P) VALVES

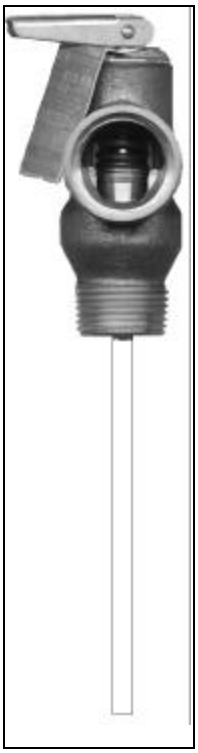

Temperature and Pressure Relief Valves, also called T&P valves, are emergency safety limit devices that will prevent or relieve overheated water and pressure. Without a T&P valve during an unsafe condition, the pressure inside the tank would rise to the point the tank may rupture or explode. This would cause potential damage to both people and property. Rheem water heaters are pressure tested to 300 pounds per square inch (PSI) and have a working pressure of 150 PSI. The T&P valve is designed to open when the pressure inside the tank exceeds 150 PSI, allowing pressure to vent safely. The T&P valve will also open if the water temperature reaches 210° F. The valve will remain open allowing cold water into the tank until the unsafe condition is over.

Why is hot water over 212° F dangerous? The containment vessel or storage tank used to store the hot water causes the danger. This tank is under pressure - the normal working pressure caused by the cold water supply. As water is heated under pressure, the boiling point rises. For example, with a nominal incoming supply pressure of 50 PSI, water will not boil under pressure until the temperature reaches approximately 297° F. The energy potential in the super heated water is called latent heat energy and will flash to steam when exposed to normal atmospheric pressure. This flash to steam has the explosive potential of over two million foot-pounds of energy.

Fig 10 - Temperature & Pressure Relief Valve

The Temperature and Pressure Relief Valve is the safety device that prevents these conditions from happening. It is a 2-in-1 device that responds to both pressure increases and temperature increases. When actuating by pressure, the T&P valve will open and allow the tanks internal pressure to drop below 150PSI. Generally, when you see a T&P valve weeping or dribbling, it is due to pressure (thermal expansion) or foreign material such as calcium buildup in the valve seat. This material on the valve seat will prevent the valve from closing tightly. If the valve is discharging large quantities of water, then the release is due to temperature. Remember the T&P is installed in the top six inches of the tank. If the temperature probe on the T&P senses water temperatures of 210° F, it will open the valve. The valve will stay open until the temperature probe cools. With cold water entering the bottom area of the tank, you can see a large volume of water (gallons) will be discharged before the temperature probe cools.

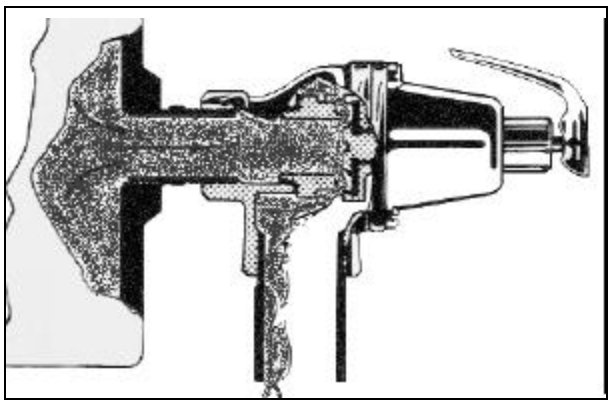

T&P valves should be inspected and tested on every service call. When checking the valve, also check the rating plate on the valve. Many changes may take place in a plumbing system after the original installation. Through a systemic reinspection program, we can insure that the safety device is working properly. The

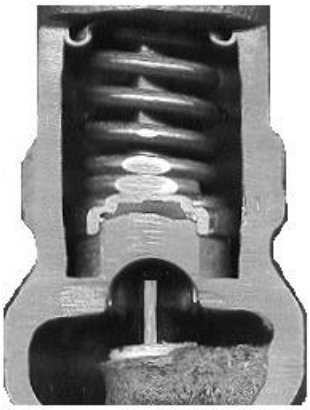

T&P Valve must be capable of discharging more BTUs than the heater is capable of putting into the water.

Installation of a temperature and pressure relief valve is critical to the safe operation of a water heater. The basic rule is that the T&P valve must be installed so that the temperature-sensing probe is immersed in the hottest water - which is in the top six inches of the tank. All water heaters manufactured by Rheem - Ruud have a separate and special connection designed for the T&P valve. When checking the valve also check the rating plate on the valve. The BTU rating of the valve must equal or exceed the BTU rating of the water heater.

Fig 11 - T&P Valve Cutaway View

Here are some common T&P valve errors

No T&P installed or pressure only relief valve installed
Non-code or insufficient rating T&P valve installed
T&P installed in the cold water line
T&P installed a distance from the tank, such as in the hot outlet line
T&P has been altered, repaired, plugged or restricted

Tips for the Temperature and Pressure Relief drain line

Run to a safe place of disposal (floor drain or outside)
Drain piping should be the same size as the valve discharge through its entire length
Pitch downward from the valve and terminate 6 inches above the floor drain
No longer than 30 feet. Do not use more than four elbows
Do not install a shut off valve in the drain line and terminate unthreaded

Discharge of the T&P indicates the existence of an unsafe temperature or pressure condition.

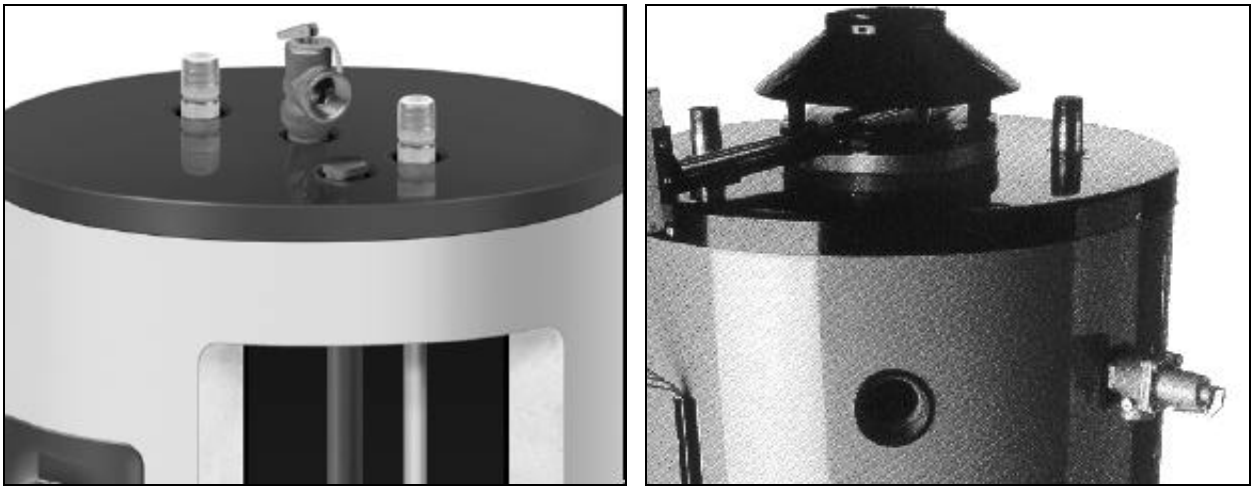

Fig 12 - Proper T&P Valve locations for residential or commercial water heaters

PLUMBING CROSS OVER

A plumbing cross over is a condition whereby cold water is allowed to flow into the hot water system. The plumbing system in a home is divided into two sub-systems, the hot water supply and the cold water supply.

The modern home, or a remodeled older home, will most likely have at least one mixing or single handle type faucet installed. Most homes today have an automatic laundry washing machine. Both of these are examples of appliances and fixtures that have a mixing valve. Any mixing valve can allow a cross-over to occur should they become defective. A defective mixing valve will allow a cross-over of hot and cold water, even though there are no visible signs of trouble or leak.

Plumbing cross overs can cause a complaint such as ‘water not hot enough’. Testing the hot plumbing system for a cross over can be accomplished by using the following procedure.

1. Close the cold water shut off valve supplying cold water to the heater.
2. Using a faucet with separate HOT and COLD spigots, open the hot faucet only.
3. With the cold water to the heater shut off, once the pressure is relieved, the water should stop running completely. Should the water continue to flow, but at a slower than normal rate, you have one of two conditions. If the slower flow continues but stays HOT, the cold water shut off valve is defective and the test will not be valid. Replace the cold water shut off valve and continue the test. If the water turns COLD, you have cold water crossing over to the hot water plumbing system.
4. To locate the cross-over, first shut off the hose bibb (service valves) to the laundry washer. If the water stops flowing at your hot faucet, the washing machine mixing valve is causing the cross-over.
5. If the flow does not stop, then you must check, by feel, each of the feed lines to each of the single handle faucets. If you find one faucet where both feed lines are equally cold, that faucet is allowing an internal cross-over to occur and should be rebuilt or replaced.
6. If none of the above resolve the cross-over, a direct cross-over exists in the plumbing somewhere. This means the hot water sub-system and the cold water sub-system are directly tied together after the water heater.

When performing this test in a home that has only mixing (single spigot) faucets, the test must be done twice. Each test must be done using a different faucet. The faucet used for the first test may be causing the problem and should be tested in the off position.

In a house with all double handle faucets, you may find a shower head with a built in shut off (shut off valve is connected directly to the shower head). If the user shuts the shower head valve off but leaves the double handle tub facets open, this would allow a direct cross-over to occur.

HOT WATER AVAILABILITY AND CONSUMPTION FACTORS

Before studying methods of computing recovery capacities of water heaters we should understand the meaning of several commonly used terms.

Recovery Capacity
The maximum amount of water that can be heated by a water heater through a given temperature rise in a given amount of time. Recovery capacity is usually expressed in terms of gallons per hour (GPH) at 100° F temperature rise. Generally, the higher the BTU or wattage input rate, the faster the recovery rate is. Recovery rates are also a component of the First Hour Rating.

First Hour Rating
The calculated amount of hot water a fully heated water heater can deliver in the first hour period. The output on a water heater is normally given in gallons per hour at a 100°F temperature rise. It is the quantity of water that the heater will deliver at 140°F, when the cold start temperature is 40°F. *This does not mean the water heater will provide hot water for 60 continuous minutes.* This quantity of hot water is based on initial storage plus the ability to heat water as it is being drawn. The temperature of this water must be within 10° F of the thermostat setting to be considered usable.

Input
The amount of fuel (electricity) consumed by a water heater in a given period of time. It is usually expressed in terms of British Thermal Units per hour (BTUH) or Kilowatt hours (KWH).

Hot Water Demand
The total volume of hot water, in gallons, required during a peak load or maximum usage period of time. The peak load may vary from a few minutes to a few hours depending on the user.

Draw Rate
The rate at which water is drawn from a water heating system, usually expressed in gallons per minute (GPM). In residential applications, this is usually restricted to a single delivery point such as a shower head.

Stand by heat loss
Natural migration of heat from the inner tank to the atmosphere. Insulation technology and insulation thickness significantly reduce stand by heat loss.

BTU - British Thermal Unit
The amount of heat required to raise the temperature of one pound of water one degree Fahrenheit. Since one gallon of water weighs 8.33 pounds, it would require 8.33 BTU to raise one gallon of water one degree Fahrenheit. The exact amount of fuel that the water must utilize

in order to actually transfer the 8.33 BTU into the water is determined by the efficiency of the water heater in question. Electric water heaters are considered to be 95% efficient; that is 95% of the energy is transferred as heat into the water. Therefore, we can divide the standard BTU by the efficiency rating of the water heater to determine actual amount of BTU (energy). The formula would look like this:

$$\frac{8.33}{.95} = 8.77 \text{ BTU}$$

Cold Inlet Temperature
The temperature of outside water coming into a water heating system. Throughout most of the U.S. this temperature is considered to be 40°F. (during the coldest months).

Peak Period
Peak period refers to the time during the day when the water heating system experiences its greatest draw (demand). With the exception of applications that require continuous hot water draw, tests have shown that the peak period of hot water usage will occur once or twice a day in residential applications. Peak periods for commercial applications are dramatically different. By contrast, a peak period in a school gymnasium shower may occur ever hour!

Temperature Rise
The difference in temperature between the desired hot water and the incoming cold water, expressed in degrees Fahrenheit. For example, the desired temperature at the faucet is 120° F and the incoming cold water is 70° F. The required temperature rise is 50° F (120° - 70° = 50°). Temperature rise is the number of degrees Fahrenheit that the water must be raised either from the inlet water temperature or a pre-heat water temperature. In short, the temperature rise is the difference between existing water temperature and desired water temperature.

Another factor in proper sizing is recovery time. A smaller gallon capacity heater with a high recovery time (heats water faster) may prove as effective as a larger capacity heater with a nominal recovery time.

N O T E S

Water Heater Gallons	Gallons of hot water available at 120 degrees	*Gallons available within 10 degrees of thermostat	Shower Time Available Based of gallons per minute flow of shower head		
			3 GPM	6 GPM	9 GPM
30	21	27	9	4 1/2	3
40	28	36	12	6	4
50	35	45	15	7 1/2	5
66	46	59	20	10	6 2/3
80	56	72	24	12	8
120	84	108	36	18	12

Table 3 - Shower Time Available

* gallons available is initially slightly higher than the 70% rule due to the heating action of the heating elements during usage. Eventually demand will consume the hot water faster than the elements can heat.

The chart above shows the actual amount of hot water available at 40 PSI system pressure during the first hour of delivery and what that amount means in terms of shower time. A higher system pressure will reduce shower time.

A common problem is the complaint of ‘not enough hot water’. Earlier in this manual there was some diagnostics for mechanical failures that can cause this problem. As you can see, the source of the problem may not be mechanical; it may be consumption. Demand rate may also be another source of problem. For example, a shower head distributing 9 gallons per minute (GPM) will have less shower time than a shower head with 3 gallons per minute. The lower the GPM, the more hot water available.

DRAW TEST AND FLOW RATES

Testing show head flow rate

Flow rate is simply the gallons per minute (GPM) of water a faucet will allow at full force. Flow rate of a shower head or other faucet fixture is important in determining the consumption patterns of a user. Using a bucket and a watch with a second hand, draw cold shower water at full volume for 15 seconds. Using the draw test table and a quart measure, determine the number of quarts drawn in the 15 second period.

For example, a homeowner has a 40 gallon water heater set to 120° F. That will allow approximately 36 gallons of hot shower water at 110°. If the homeowner has a conservative flow rate of 3 GPM, the shower will last 12 minutes. If the homeowner has a wasteful flow

rate of 9 GPM, the shower will last 4 minutes. Very often the homeowner will complain of NOT ENOUGH HOT WATER, and blame the water heater. Actually, the water heater is fine — the homeowner has a wasteful consumption pattern and possibly an undersized water heater.

NUMBER OF QUARTS IN 15 SECONDS		GALLONS PER MINUTE FLOW (GPM)
1		1
2	Conservative	2
3		3
4		4
5	Moderate	5
6		6
7		7
8		8
9	Wasteful	9
10		10

Table 4 - Draw Test and Flow Rates

FIRST HOUR DELIVERY

First Hour Delivery (or sometimes called first hour rating) is a term that describes the performance capability of the water heater. By definition, first hour delivery is the calculated amount of hot water a fully heated water heater can deliver in the first hour period. This means you start with a water heater that has recovered to its thermostat setting (fully heated) and someone starts to use hot water such as in a shower. It does not mean the hot water will last for one full hour.

The Federal Government requires manufacturers to put a yellow ENERGYGUIDE label on a residential water heater. This label shows the first hour rating for the product.

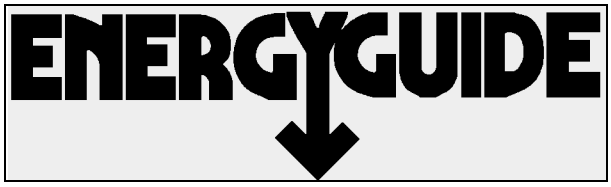

A residential water heater will deliver 70% of tank capacity at the thermostat setting minus 20 degrees. What does this mean? If the thermostat is set on 120 degrees, the unit should deliver 70% of tank volume at a temperature between 100 degrees and 120 degrees.

What does 70% of tank capacity mean? It means 70% of the gallons capacity listed on the rating plate. For example:

Tank capacity in gallons	70% rule in gallons
30	21
40	28
50	35
65	45 1/2
75	52 1/2
80	56

Why only 70% of the tank capacity? Simple, cold water is entering the heater as the hot water is being used. This cold water mixes with the hot water in the tank. Much the same as cooling off a hot beverage with a little cold water, the water heater works on the same principle.

As a hot water faucet is turned on, the dip tube, attached on the cold water inlet side of the heater, delivers the cold water to the bottom of the tank. The pressure of the incoming cold water pushes the hot water out of the tank. Once enough cold water has entered the tank and mixed with the hot water, this will cause the water to turn warm, then tepid, then cold. This is how we calculate the 70% rule. Once you have used the 70% of available hot water, the water will quickly become cold.

As hot water is being used, the thermostat(s) on the heater will demand heat and the unit will start to recover. This means it will heat water, even while hot water is being used. The recovery capabilities of a water heater are standard characteristics and are factored in with the 70% rule to determine first hour delivery. To determine the 'ballpark' first hour delivery use the following formula:

(tank capacity) x .70 + (recovery) = first hour delivery

For instance: You have a 40 gallon, 40,000 BTU gas water heater -

40 x .7 + 36 = 64 gallons first hour delivery

You can find the recovery rate in gallons per hour for your heater in the following charts. Check the rating plate of your water heater for the input in watts (electrical) or BTUs (gas).

Water Heater Recovery Rates in Gallons per Hour

		Degrees F Rise								
Input KW	BTUs	40^0	50^0	60^0	70^0	80^0	90^0	100^0	110^0	120^0
1,000	3,413	10	8	7	6	5	5	4	4	3
1,500	5,120	16	12	10	9	8	7	6	6	5
2,000	6,826	21	17	14	12	10	9	8	8	7
2,500	8,533	26	21	17	15	13	12	10	10	9
3,000	10,239	31	25	21	18	16	14	12	11	10
3,500	11,946	36	29	24	21	18	16	15	13	12
4,000	13,652	41	33	28	24	21	18	17	15	14
4,500	15,359	47	37	31	27	23	21	19	17	16
5,000	17,065	52	41	34	30	26	23	21	19	17
5,500	18,722	57	46	38	33	28	25	23	21	19
6,000	20,478	62	49	41	35	31	27	25	22	21
9,000	30,717	92	74	61	53	46	41	37	34	31
12,000	40,956	123	98	82	70	61	55	49	45	41

Table 5 - Water Heater Recovery Rates in Gallons per Hour

SIZING OF A RESIDENTIAL WATER HEATER

Like any household appliance, the water heater has a very specific job to perform and it must do its job to the homeowner's complete satisfaction 24 hours a day, every day, for years and years. Water heating requirements for the home have increased steadily. As a result, the last water heater purchased by the homeowner now may be too small to satisfy household needs. In addition, rising energy costs have become a concern. Operating costs now can be just as important in making the buying decision as the initial price of the new water heater itself!

How many family members will routinely take a shower in any given hour. For instance, if all four of the children take a shower between 7 - 8 PM daily to get ready for bed, you may have a high usage demand. If both parents take their showers in the morning, Mom gets a load of clothes in the washing machine and turns the dish washer on before everyone leaves for school and work, you may have a high usage demand. Focus on the customer's usage pattern and consumption factors.

Peak Hour Demand is the key. Peak hour demand is the busiest one-hour usage period. This may be in the morning, evening or some other time during the day. Accurate calculation of the demand is essential to proper water heater sizing. Look at the following sample of a typical peak hour demand for this family of three.

Household Activity	**Avg Gallons per activity**	**Times per hour**	**Total Hot Water used**
Shower or bath	20	3	60
Shave	2	1	2
Washing hands or face	4		
Shampoo hair	4	1	4
Washing dishes by hand	4	1	4
Automatic dishwasher	14		
Food preparation for a meal	5		
Automatic clothes washer	32		
Total Peak Hour Demand			**70 gallons**

Table 6 - Sample Peak Hour Demand Calculation

After you have calculated the actual peak hour demand load, you can use a make and model chart to choose the correct water heater within +/- 2 gallons capacity. When selecting the proper size look for the 'first hour rating' on the model chart. The 'first hour rating' is a function of the initial storage capacity plus the ability of the water heater to heat while in use. In the example above, you would select a Rheem residential electric water heater with a 65 gallon storage capacity. Use the table below to calculate the Peak Hour Demand.

Household Activity	**Avg Gallons per activity**	**Times per hour**	**Total Hot Water used**
Shower or bath	20		
Shave	2		
Washing hands or face	4		
Shampoo hair	4		
Washing dishes by hand	4		
Automatic dishwasher	14		
Food preparation for a meal	5		
Automatic clothes washer	32		

Total Peak Hour Demand **_____ gallons**

Table 7 - Peak Hour Demand Calculation Blank Worksheet

Investigate the owners pattern of hot water usage. Some sample questions may include:

- Number of people in the family; kids, teenagers
- How many bathrooms, garden tub or hot tub
- Automatic dishwasher
- Clothes washer
- Frequent visitors or family guests
- Recent remodeling involving hot water appliances

ENERGY FACTOR

Energy Factor is a relative number that is a standard measure for storage water heating products. It is determined through a Department of Energy (DOE) standard test procedure. This procedure involves a water heater that is put through a 24 hour simulated use test. The simulated use test is used by all water heater manufacturers. All of the test procedures are mandated by the DOE. Test procedures include the length of the test; the thermostat setting; the water temperature of the cold water delivered into the water heater; and the quantity of hot water drawn from the heater during the 24 hours of testing.

The final number is displayed in a decimal equivalent. It is not meant to be a percentage. This number, called the Energy Factor (EF) represents the efficiency of the water heater. The higher the EF, the more efficient the unit. The Energy Factor represents two major conditions when determining water heater efficiency:

How efficiently the unit uses fuel (gas or electric)
How efficiently the unit retains heat during 'stand-by'

How useful is the Energy Factor?

The EF aids the consumer is making comparison shopping easier. When shopping for a new water heater, the consumer can compare the EF rating of the unit against like units. 'Like units' is not a relative term. When comparing the EF, consumers must compare water heaters with the same fuel source, gas or electric, and the same water storage capacity. Comparing the EF between a natural gas unit and an electric unit is not comparison shopping. Comparing 50 gallon electric units to each other is comparison shopping.

VACATIONS AND LONG TERM IDLE TIME

If the water heater is to remain idle for an extended period to time (such as a week long vacation), the power and the water to the water heater should be turned off to conserve energy. Water heaters that have been idle for a long time are a safety hazard.

Hydrogen gas can be produced in a hot water system that has not been used for a long period of time (generally two weeks or more). Hydrogen gas is extremely flammable! To dissipate hydrogen gas from a heater, it is recommended that the hot water faucet be opened for several minutes at the kitchen sink before using any electrical appliance connected to the hot water system. If hydrogen gas is present, there will probably be an unusual noise such as air escaping through the pipe as the water begins to flow. Do not smoke or use an open flame near the faucet at the time it is open.

SUBMERGED WATER HEATERS

If your water heater(s), gas or electric, has been submerged in water, DO NOT ATTEMPT to repair, install, or operate the product. Due to the conductivity of water along with its corrosive properties all the operational controls are rendered unsafe. As for the insulation properties of the product, it would have become saturated with water which cannot be removed resulting in exterior corrosion and failure of the product.

The affected water heater(s) should be removed, made unusable, and, replaced with a new unit. As a further note, warranties on our products will not be applied when the product has been damaged, among other things, by flood. Any claims made will be declined if it is determined the cause of failure is the product being damaged as a result of flood.

INSTALLATION - SERIES AND PARALLEL

The installation drawings in this section are typical. Check local code requirements for vacuum breaker devices and cold water inlet check valves. ***If you install a check valve in any of these systems, you must install a thermal expansion tank.***

The majority of commercial water heater installations involve the delivery of water at one temperature only. The exceptions, or two temperature systems, are restaurants, convalescent homes and special process applications. In most of these general purpose applications, the water heater thermostats are adjusted to deliver water at a temperature ranging from 130^0 F to 150^0 F. The simplest of the single temperature systems is one using a single, free standing water heater. This design uses an automatic storage (tank type) water heater and is piped directly with a cold in and hot out. The heated water is delivered directly to its point of use and is mixed at the sink, tub or faucet.

In many cases a single water heater may not have enough capacity to handle the hot water demand. In this case, two or more heaters can be piped together in a piping arrangement called manifolding. Manifolding multiple heaters or a heater with storage tanks will increase the quantity of hot water available or will allow for dual delivery temperature requirements. The only aspect of the heater that will make the unit heat water faster is the BTU input rating.

The second method of installation is to manifold more than one water heater or storage tank in series or parallel. Manifold means to pipe together with several apertures that make multiple connections. That is what manifolding is all about. With commercial water heaters, you may manifold one heater to two or more storage tanks; or you may manifold two, three or four water heaters together. There are two methods of manifold installation: series and parallel.

SERIES INSTALLATION

Series installation uses heaters that are not identical in both BTU input and storage capacity. An example might be when a commercial business expands or adds on a facility that will require additional hot water. The existing system will not handle the demand and a new water heater must be installed. The new heater is not identical to the existing heater. In this example, series installation may be appropriate. When installing water heaters in series, the heater with the largest BTU input should be the first heater in the series, at the cold water inlet side of the system.

Series installation draws hot water from one tank at a time. As hot water is drawn, it is taken from the last heater in the series. For every gallon of hot water drawn, preheated water is introduced into the last heater in the series and cold water is introduced into the first heater in the series. In a series configuration, the first heater, piped to the cold water inlet, will do the majority of the work. The second (or remainder) heaters will not work as hard because they receive preheated water, not cold water. The last heater in the series will do very little work.

In the example, the commercial installation shows a series system with a booster heater. The larger tank type heater is supplying the 120^0 to 140^0 hot water demands to sinks and lavatories. The booster heater is supplying hot water to a dishwasher that requires 180^0 water for the sanitizing rinse. If the dishwasher consumes less than the recovery capability of the booster heater, the booster heater is considered to be an 'instantaneous' heater.

Fig 13 - Series Installation

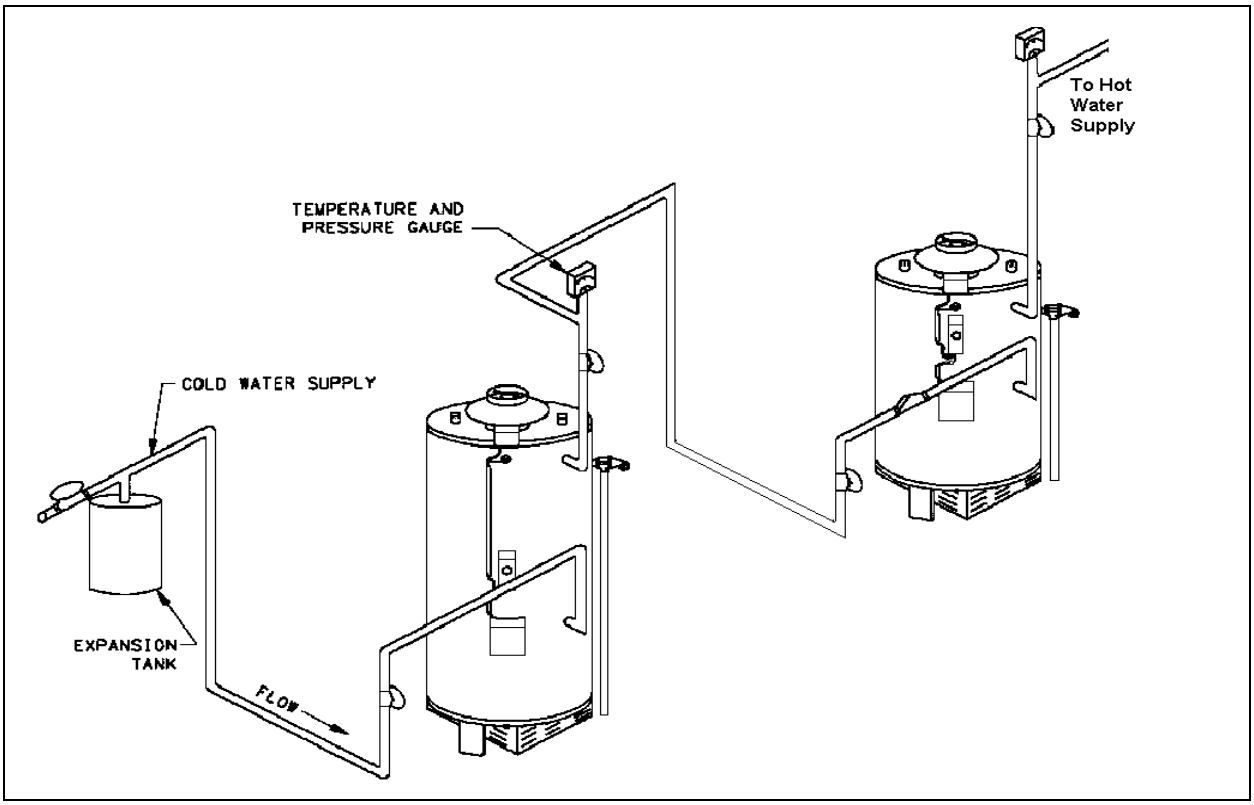

PARALLEL INSTALLATION

Parallel installation uses heaters that are identical in both BTU input and storage capacity. Normally, parallel installation is used when there is a demand for large quantities of hot water over a shorter period of time. Equipment being equal, two or more heaters connected in parallel will deliver more hot water than the same heaters connected in series. In a parallel configuration, the hot water demand is taken equally from each unit. For every gallon of hot water drawn from each unit, one gallon of cold water is introduced into the water heater. Each heater will then perform the same amount of work to heat the cold water.

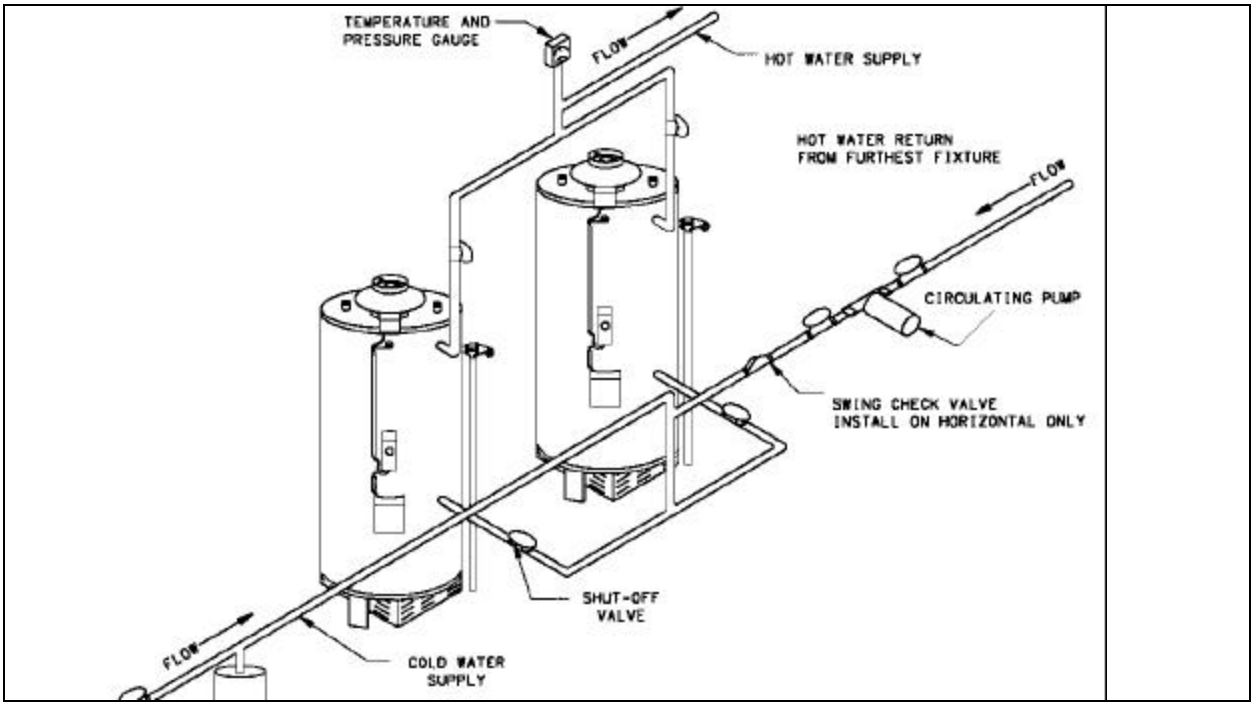

Fig 14 - Parallel Installation

Another important point of parallel installation is the length of the supply piping and delivery piping - they must all be the same length. Because the water pressure is constant along the cold inlet piping and hot water supply piping, the heater with the closest 'run' will do the majority of the work. When installing heaters and storage tanks in parallel, it is important to accurately plan and measure the distances from the cold water supply pipe to the heaters and from the hot water outlet on the heater to the hot water supply line. This will equalize the work between the two water heaters.

Storage tanks are another option using parallel installation. One heater is used to heat the water to thermostat temperature. The heated water is stored in two storage tanks piped in parallel. As the water is consumed at its point of use, it is drawn equally from the two storage tanks and replaced with heated water from the heater. This setup is generally used when there is a large quantity of hot water drawn in a single use. When a single heater is used with multiple storage tanks, you will experience a longer recovery time.

PERCENTAGE OF HOT AND COLD WATER MIX

Many consumers do not realize how much hot water they are using in a given draw. This chart shows the percentage of hot water used given the thermostat setting, the cold water inlet temperature, and the temperature of the hot water. For example:A water heater with a thermostat setting of 120° F and the cold water inlet temperature is 50° F and the shower temperature is 110° F would use 86% HOT water and 14% COLD water.

Thermostat	**120⁰**	**Mixed Temperature**				
		100⁰	105⁰	110⁰	115⁰	120⁰
Cold Inlet	40⁰	75%	81%	88%	94%	100%
	45⁰	73%	80%	87%	93%	100%
	50⁰	75%	81%	88%	94%	100%
	55⁰	73%	80%	87%	93%	100%
	60⁰	75%	81%	88%	94%	100%
	65⁰	73%	80%	87%	93%	100%
	70⁰	75%	81%	88%	94%	100%
	75⁰	73%	80%	87%	93%	100%

Thermostat	**125⁰**	**Mixed Temperature**					
		100⁰	105⁰	110⁰	115⁰	120⁰	125⁰
Cold Inlet	40⁰	71%	76%	82%	88%	94%	100%
	45⁰	69%	75%	81%	88%	94%	100%
	50⁰	67%	73%	80%	87%	93%	100%
	55⁰	64%	71%	79%	86%	93%	100%
	60⁰	62%	69%	77%	85%	92%	100%
	65⁰	58%	67%	75%	83%	92%	100%
	70⁰	55%	64%	73%	82%	91%	100%
	75⁰	50%	60%	70%	80%	90%	100%

Thermostat	**130⁰**	**Mixed Temperature**						
		100⁰	105⁰	110⁰	115⁰	120⁰	125⁰	130⁰
Cold Inlet	40⁰	67%	72%	78%	83%	89%	94%	100%
	45⁰	65%	71%	76%	82%	88%	94%	100%
	50⁰	63%	69%	75%	81%	88%	94%	100%
	55⁰	60%	67%	73%	80%	87%	93%	100%
	60⁰	57%	64%	71%	79%	86%	93%	100%
	65⁰	54%	62%	69%	77%	85%	92%	100%
	70⁰	50%	58%	67%	75%	83%	92%	100%
	75⁰	45%	55%	64%	73%	82%	91%	100%

Table 8 - Percentage of Hot and Cold Water Mix

Commercial Temperatures

Thermostat	135⁰	Mixed Temperature							
		100⁰	105⁰	110⁰	115⁰	120⁰	125⁰	130⁰	135⁰
Cold Inlet	40⁰	63%	68%	74%	79%	84%	89%	95%	100%
	45⁰	61%	67%	72%	78%	83%	89%	94%	100%
	50⁰	59%	65%	71%	76%	82%	88%	94%	100%
	55⁰	56%	63%	69%	75%	81%	88%	94%	100%
	60⁰	53%	60%	67%	73%	80%	87%	93%	100%
	65⁰	50%	57%	64%	71%	79%	86%	93%	100%
	70⁰	46%	54%	62%	69%	77%	85%	92%	100%
	75⁰	42%	50%	58%	67%	75%	83%	92%	100%

Thermostat	140⁰	Mixed Temperature								
		100⁰	105⁰	110⁰	115⁰	120⁰	125⁰	130⁰	135⁰	140⁰
Cold Inlet	40⁰	60%	65%	70%	75%	80%	85%	90%	95%	100%
	45⁰	58%	63%	68%	74%	79%	84%	89%	95%	100%
	50⁰	56%	61%	67%	72%	78%	83%	89%	94%	100%
	55⁰	53%	59%	65%	71%	76%	82%	88%	94%	100%
	60⁰	50%	56%	63%	69%	75%	81%	88%	94%	100%
	65⁰	47%	53%	60%	67%	73%	80%	87%	93%	100%
	70⁰	43%	50%	57%	64%	71%	79%	86%	93%	100%
	75⁰	38%	46%	54%	62%	69%	77%	85%	92%	100%

Thermostat	150⁰	Mixed Temperature					
		100⁰	110⁰	120⁰	130⁰	140⁰	150⁰
Cold Inlet	40⁰	55%	64%	73%	82%	91%	100%
	50⁰	50%	60%	70%	80%	90%	100%
	60⁰	44%	56%	67%	78%	89%	100%
	70⁰	38%	50%	63%	75%	88%	100%

Thermostat	160⁰	Mixed Temperature						
		100⁰	110⁰	120⁰	130⁰	140⁰	150⁰	160⁰
Cold Inlet	40⁰	50%	58%	67%	75%	83%	92%	100%
	50⁰	45%	55%	64%	73%	82%	91%	100%
	60⁰	40%	50%	60%	70%	80%	90%	100%
	70⁰	33%	44%	56%	67%	78%	89%	100%

Thermostat	170⁰	Mixed Temperature							
		100⁰	110⁰	120⁰	130⁰	140⁰	150⁰	160⁰	170⁰
Cold Inlet	40⁰	46%	54%	62%	69%	77%	85%	92%	100%
	50⁰	42%	50%	63%	67%	75%	83%	92%	100%
	60⁰	36%	45%	59%	64%	73%	82%	91%	100%
	70⁰	30%	40%	55%	60%	70%	80%	90%	100%

Thermostat	180⁰	Mixed Temperature								
		100⁰	110⁰	120⁰	130⁰	140⁰	150⁰	160⁰	170⁰	180⁰
Cold Inlet	40⁰	43%	50%	57%	64%	71%	79%	86%	93%	100%
	50⁰	38%	46%	52%	62%	69%	77%	85%	92%	100%
	60⁰	33%	42%	48%	58%	67%	75%	83%	92%	100%
	70⁰	27%	36%	43%	55%	64%	73%	82%	91%	100%

FORMULAS AND FACTS

1 gallon of water weighs 8.33 lbs

1 gallon of water has a volume of 231 cubic inches

1 cubic foot of water weighs 62.38 lbs and contains 7.48 gallons of water

100 feet of 3/4“ copper pipe contains 2.5 gallons of water; 1” pipe contains 4.3 gallons

8.33 BTU will raise 1 gal of water 1°F at 100% efficiency (electricity)

11 BTUs are required to raise 1 gallon of water 1°F at 70% efficiency (gas)

3,412 BTU equals 1 kilowatt hour (Kwhr)

1 Kwhr will raise 410 gallons of water 1°F at 100% efficiency

1 BTU X 0.293 = watts

1 KW = 1000 watts

2.42 watts are required to raise 1 gallon of water 1°F

1 Kwhr will raise 10.25 gal of water 40 degrees F at 100% efficiency
1 Kwhr will raise 6.8 gal of water 60 degrees F at 100% efficiency
1 Kwhr will raise 5.1 gal of water 80 degrees F at 100% efficiency
1 Kwhr will raise 4.1 gal of water 100 degrees F at 100% efficiency

Formula for mixing hot water

$$\frac{M-C}{H-C} = \text{Percent of hot water required to produce desired mixed temperature.}$$

Where M = mixed water temperature; C = cold water temperature; H = hot water temperature

For example: How much of a shower is hot water and how much is cold water? My shower temperature is 105° F, my water heater thermostat is set on 120° F and the cold water inlet temperature is 50° F.

$$\frac{105 - 50 = 55}{120 - 50 = 70} = 79\%$$ of the shower is 120° hot water This formula for mixing hot water is important when explaining a NOT ENOUGH HOT WATER trouble call and the water heater is functioning properly.

Fahrenheit to Centigrade

(°F - 32) * .556

For example: Convert my water heater thermostat setting of 120° F to Celsius

(120° - 32) *.556
(88) *.556
49° C

Centigrade to Fahrenheit

(°C*1.8) + 32

For example: Convert the outside temperature of 49° C to Fahrenheit

(49° * 1.8) +32
(88.2) + 32
120° F

Electric

Energy Costs:

Kwhr x fuel costs = energy costs

If I use 100 kilowatt hours of electricity, how much will it cost if each kilowatt hour costs $.05?

100 x .05 = $5.00

Gas

Energy Costs:

Cubic feet x fuel costs = energy costs

If I use 100 cubic feet of gas, how much will it cost if each cubic foot costs $.075?

100 x .075 = $7.50

Electric

To obtain gallons per hour (GPH) recovery

$$\frac{\text{WATTS}}{2.42 \times (\text{temp rise } ^\circ \text{F})}$$

I have a 30 gallon electric heater, non-simultaneous operation, 4500 watt elements. What is the recover GPH if my cold water is 40° F and my thermostat is set to 120° F?

$$\frac{4500}{2.42 \times 80} = 23 \text{ gallons per hour}$$

Gas

To obtain gallons per hour (GPH) recovery

$$\frac{\text{HOURLY INPUT (BTUs)}}{11.0 \times (\text{temp rise } ^\circ \text{F})}$$

I have a 30 gallon gas heater rated at 40,000 BTUs. What is the recover GPH if my cold water is 40° F and my thermostat is 120° F?

$$\frac{40{,}000}{11.0 \times 80} = 45 \text{ gallons per hour}$$

Electric

Temperature Rise (°F)

WATTS
2.42 x GPH

I have a 30 gallon electric heater, non-simultaneous operation, 4500 watt elements. What is the maximum temperature rise if the heater can recover 23 gallons per hour?

$$\frac{4500}{2.42 \times 23} = 80 \text{ degrees temp rise}$$

Gas

Temperature Rise (°F)

HOURLY INPUT (BTUs)
11.0 x (GPH)

I have a 30 gallon gas heater rated at 40,000 BTUs. What is the maximum temperature rise if the heater can recover 45 gallons per hour?

$$\frac{40{,}000}{11.0 \times 45} = 80 \text{ degrees temp rise}$$

N O T E S

GLOSSARY

Aerated Pilot
Pilots which inject primary air through an air intake opening and mix the air and gas before burning.

A.G.A. (American Gas Association)
The association which governs the testing and certification to the ANSI Z21.10.1 standards of residential natural and LP gas fired water heaters. AGA is funded primarily from the gas utilities and their mission is to support these utilities and manufacturers in the promotion of gas, and gas consuming appliances. With the exception of the mobile home direct vent model which is U.L. certified, all residential gas water heaters are AGA certified.

Air Shutter
Means by which the size of the primary air opening may be varied to control the amount of primary air intake.

Alternating Current (A.C.)
Electrical supply in which the polarity of the hot wire (whether wire is positive or negative) reverses rapidly. A.C. is the normal electrical supply in all parts of the United States.

Ambient Temperature
The ambient temperature is the average temperature of the atmosphere in the vicinity of the appliance. Performance of water heaters is generally checked with reference to ambient temperature rather than a fixed temperature, to allow for a statement of performance which will hold true for summer and winter performance.

AMP or AMPERE (amp)
A measure of flow of electric current. An electrical circuit or electrical wiring is designed to take a certain maximum current load, and this should not be exceeded. The amps flowing through an appliance are calculated by dividing the watts loading by the voltage.

Anode
The positive electrode of an electrical cell is called the cathode. An anode may be in the form of an expendable electrode used to reduce or prevent corrosion (see under "galvanic action") or as a source of material in electroplating.

Annual Cost of Operation
An estimate of the yearly operating cost for residential gas and electric water heaters. The U.S. averages for gas and electric fuel rates are provided yearly by the Department of Energy and this information is used to compute the yearly operating cost data which appears on the Energy Guide label.

Anode Rod
The active metal within a steel glass lined tank which sacrifices itself in order to prevent any

exposed steel ("cathode") from corrosion. The patented "R-Tech" anode rod used by Rheem is made of magnesium and is designed to last longer, and offer greater tank protection than those used by other manufacturers.

ANSI Z21.10.1 (American National Standards Institute)
The testing and safety standards which govern all residential gas fired water heaters up to 100 gallon capacity and up to 75,000 BTU's.

Anti-Siphon Hole
A small hole located in the dip tube approximately six inches from the top. The anti-siphon hole is designed to prevent the siphoning of water through the cold water line in the event of a reverse water flow or siphon condition.

ASHRAE (American Society of Heating, Refrigeration, and Air Conditioning Engineers)
An association which recommends standards and test methods used today, primarily for commercial water heaters. Prior to the NAECA law which now governs residential water heaters, the ASHRAE Standard 90A-1980 was used as a standard for high efficiency water heaters. While no longer applicable, residential water heaters continue to meet this standard.

ASME (American Society of Mechanical Engineers)
May be required on commercial water heaters over 120 gallons or over 200,000 BTUs. The ASME code is generally adopted on a state by state basis.

Automatic Storage Commercial Heater
A water heater that heats and stores water within the appliance at a thermostatically controlled temperature for delivery on demand, and which has an input rating of less than 4,000 BTU per hour per gallon of stored water. Input rating is above 75,000 BTUH.

Backflow Device - Backflow Preventer
A device (valve) which allows water to flow in only one direction. In order to comply with the provisions of the Safe Water Drinking Act, Municipal Water Systems or local plumbing codes may require these devices to be installed in the cold water inlet line to prevent water from backing up into the central main. Backflow devices cause a closed-loop system which can become a potentially dangerous situation due to the effects of thermal expansion. (See: Check-valve, thermal expansion, expansion tank)

Boiling Point
The boiling point refers to the temperature at which a liquid changes to vapor by the addition of heat. The boiling point depends on the pressure at which the liquid is held; and it increases as the pressure increases.

BTU (British Thermal Unit)
A measure of energy used to determine the input ratings for natural and LP water heaters. The amount of energy required to raise one pound of water, one degree Fahrenheit.

Carbon Monoxide
A by-product of gas combustion which is generated as the result of the burning of fossil fuels (natural and LP gas). For safety purposes, the ANSI Z21 standards set specific limits for the amount of carbon monoxide that can be emitted from gas burning water heaters.

Cast Iron Burner
A burner made of cast iron material, used today on the higher input water heaters of 60,000 BTU's up to 75,500 BTU's. Previously, cast iron was the preferred burner material used on LP water heaters until the development of stainless steel burners in the mid-80's.

Catch Pan
A pan (usually metal) placed under the water heater to help prevent water damage in the event the water heater should begin to leak. Most catch pans have either a side or bottom drain fitting which should be piped to a suitable floor drain or piped to the outside of the home. Local codes may govern the type of catch pan required and how it is to be piped.

Cathode
The negative electrode or an electrical cell - the opposite to anode. See also under "galvanic Action".

Check Valve
Also know as a non-return valve, a check valve is intended to allow a fluid to flow in only one direction in a pipe. Should conditions occur which might lead to flow in the reverse direction the valve automatically closes.

Chemical Rinse
A chemical sanitation rinse used in some dishwashers which allows the maximum rinse water temperature to be 140°F, instead of 180°F.

Circulating Tank Heaters
There are two types as follows:

a. Automatic Circulating Tank Water Heater: A water heater which furnishes hot water to be stored in a separate vessel. Storage tank temperatures are controlled by means of a thermostat installed on the water heater. Circulation may be either gravity or forced.
b. Non-automatic Circulating Tank Water Heater: A water heater which furnishes hot water to be stored in a separate vessel. Storage tank temperatures are controlled by means of a thermostat installed in the storage vessel. (The Non-automatic is normally a tube type of heater).

Circulating Tank System
A water heating system in which a water heater is connected to a separate storage tank so that large amounts of hot water may be built up for use during relatively short periods of peak demand. The ratio of recovery to storage is approximately 1 GPH recovery (100°F Rise) to gallon stored.

Coaxial Vent
A vent system which provides for both outside air for combustion as well as venting of the combustion exhaust gases in a single vent system. Combustion air enters through the outer air tube and flows to the combustion chamber. Flue gases are discharged through the inner exhaust tube and released outside the building. (See also Direct Vent)

Cold Inlet Temperature
The temperature of outside water coming into a water heating system. Throughout most of the U.S. this temperature is considered to be 40°F. (during the coldest months).

Combustion
Combustion takes place when gaseous, liquid or solid fuels react at an elevated temperature with oxygen by burning, thus releasing heat. For good combustion an adequate supply of oxygen must be available, and all the carbon in the fuel will be converted to carbon dioxide and all the hydrogen to water vapor. The presence of carbon monoxide in the flue gases and/or sooting indicates imperfect combustion.

Condensation
Condensation can form on the tank when it is first filled with water. The condensation might also occur with a heavy water draw and very cold inlet water. Drops of water falling on the burner can produce a sizzling or pinging sound, and water may also be seen beneath the heater. This condition is not unusual, and will disappear after the water in the heater becomes heated. Undersized water heaters can result in excessive water condensation.

Convertible Thermostat Control
The type of control used on manufactured housing (mobile home) gas water heaters. This control is designed so it can use either natural gas or liquid petroleum (LP) gas as its fuel source. This type of control is not permitted on standard gas water heaters.

Cycle
The number of times per second that a conductor carrying AC returns to the same polarity. Generally, 60 cycle AC is supplied. The cycles do not affect heating elements, but may effect auxiliary equipment such as solenoids or coils. Synchronous motors, as used in clocks and timing mechanisms, are directly affected by changes in cycle (see also "Hertz").

D.C. (Direct Current)
Electrical supply in which the polarity of the two wires (whether wire is positive or negative) does not change. Batteries produce DC. DC supply is also found in railway use, on board some ships and in older types of generating equipment. While elements will operate equally on DC or AC auxiliary equipment such as thermostats, motors etc., do not, and special arrangements have to be made to enable an appliance designed for AC to operate on DC.

D.O.E. (Department of Energy)
Regulates the efficiency standards of all residential gas and electric water heaters with capacities from 20 to 120 gallons and inputs up to 75,000 BTU. The current NAECA standards are

administered by the Department of Energy which is required to review and recommend changes to the efficiency standards.

Dielectric unions
Generally a plastic lined nipple used in water systems of dissimilar metals to break the galvanic circuit such as that created by copper and galvanized steel. In most modern homes where copper piping is used throughout, the use of dielectric unions is not necessary.

Dip Tube
A non-metallic tube extending from the cold water inlet to a predetermined area near the bottom of the tank that feeds cold water into the water heater The length of the dip tube will vary based on the tank dimensions, and efficiency of the heater. The length of the tube is precisely measured in order to prevent excessively high temperatures at the top of the tank (stacking) during short draws of water.

Direct Vent
Designed to use outside air for combustion rather than the inside air from within a home or building. The term "balanced flue" refers to the fact they draw in the same amount of air as they exhaust. Two types of direct vent products are offered. A horizontal direct vent which handles both combustion air and discharge gases through a single, coaxial vent. The mobile home direct vent brings in combustion air from below the floor and discharges combustion products vertically through a roof jack.

Displacement
Hot water is much less dense than cold water and this is used in the displacement principle on which most storage water heaters operate. If cold water is fed into the bottom of a tank full of hot water it will displace an equal quantity of hot water out of the top of the tank and if the heater is correctly designed, the hot water will float on the cold water for a considerable time without mixing.

Draft Diverter (vent hood)
Capping device that connects the water heater to the venting system. The draft diverter aids in the venting by providing a higher ambient air pressure and assists in the updraft movement of combustion gases. Draft Hood equipped water heaters operate under a non-positive type vent pressure. The heat of the flue products provides the thermal lift to achieve a draft in the vent, with cold air entering the combustion chamber to replace the hotter air rising. The draft hood also functions as a relief opening in the event that the flue becomes blocked or experiences a down draft.

Drain Valve
Valve used primarily to drain the hot water when performing periodic cleaning or replacing a part.

Draw Rate
The rate at which water is drawn from a water heating system, usually expressed in gallons per

minute (GPM). In residential applications, this is usually restricted to a single delivery point such as a shower head.

Dry Firing
Refers to the condition of supplying power to an element in a water heater that is not completely full of water. Power supplied to an element not submerged in water can cause the element to "burn out" and fail to operate.

ECO - Energy Cut-Off
A safety cut-off switch built into the thermostat of a water heater to shut off the flow of gas or electricity before temperatures reach unsafe levels. The ECO will trip off at approximately 170 degrees Fahrenheit (electric) or 190 degrees Fahrenheit (gas).

Efficiency
Efficiency is a measure of performance expressing the results obtained as a percentage of effort put in. On this basis, thermal efficiency is the percentage of the potential heat content of a fuel which becomes available as hot water (or hot air in the case of a space heater). Thermal efficiency is a measure of performance under stated conditions, and the efficiency will vary as conditions are varied. Accordingly, official or test thermal efficiencies should not be quoted or used unless the circumstances are comparable to the method of test. See also "Pipe Losses".

Electronic Ignition
Also called intermittent ignition system. The ignition system of the residential power vent water heater. Helps reduce standby losses by igniting the pilot only during the burner cycle. Also prevents nuisance pilot outage due to down draft conditions.

Energy Factor
A measure of the overall efficiency rating of a water heater... the higher the number the more efficient the water heater.

EverKleen™
Specially developed inlet tube that creates a high-velocity spiraling water stream which helps dislodge sediment and prevent buildup in the tank. It also creates better mixing throughout the water heater tank which reduces the effects of stacking.

Expansion Tank
A tank with a sealed-in compressible air cushion which will compress as thermal expansion occurs...providing a space to hold and store the additional expanded water volume. Expansion tanks are used when check valves, back flow preventers, or pressure reducing valves are installed in a water system to deal with the effects of a "closed loop" condition.

First Hour Rating
The calculated amount of hot water a fully heated water heater can deliver in the first hour period.

Fatigue
Just as the human body can break down if exposed to an adverse environment or repeated stress, so can materials fail due to fatigue. A material can fail by repeated exposure to a stress well below its normal breaking point purely by cycling the stress on and off. Water heaters can be exposed to repeated pressure fluctuations during their life and must be designed to resist the effects of fatigue.

Flow Control Valve
These are devices that are installed between the supply pipe and the plumbing fixture (shower head, faucet, etc.) to reduce the flow of water to a constant level. They are highly recommended for large shower installations because they can often reduce the flow of water more than half without disturbing the spray pattern. This, of course, results in a savings of water and the energy required to heat the water.

Flow Rate
Flow rate is the amount of water in gallons flowing in a plumbing fixture or pipe over a period of time, normally minutes. Flow rate is normally given in gallons per minute. (GPM)

Flue Baffle
A device inside the flue that restricts the flow of the heated combustible air to allow for better heat transfer between the flue and water inside the tank.

GPH (Gallons per Hour)
The term used to measure the recovery rate of a water heater. A water heater at a certain input rate will recover "x" amount of gallons per hour at a certain temperature rise. The higher the temperature rise needed, the less a water heater will supply in GPH.

GPM (Gallons per Minute)
This stands for gallons per minute and refers to the amount of water flowing through a plumbing fixture or pipe.

Galvanic Action
If two unlike metals are immersed in an electrolyte, an electrical potential will exist between them. If the two are in electrical contact, an electrical current will flow. The metal which becomes the anode of this cell will corrode and dissolve, while the cathode will be protected from corrosion. The two metals do not have to be vastly different for this effect to take place, It can occur with copper and a copper alloy. It can even occur with two different parts of the same sheet, tube or rod.

Glass-lined
A coating of enamel bonded to the inside of the tank to help protect the tank from corrosive elements in the water. This is a coating of vitreous enamel bonded to an iron or steel surface by firing at red heat. The enamel is a special formulation resistant of hot water and is not the same type of glass as that used in windows and glassware. Glass lined heater may be referred to as 'glass enamel lined', 'glass enameled', 'vitreous enameled' or 'bonded vitreous enamel'.

Grain
A measure of weight. There are 7,000 grains in one pound.

Hardness (of water)
Natural waters contain impurities in various proportions. Some of these impurities affect the lathering of soap in such water. The main impurities are the soluble slats of magnesium and calcium. The hardness of a water is its difficulty in raising a lather. Hardness is measured in terms of the equivalent amount of calcium carbonate in a solution which would cause equal difficulty in lathering. It may be quoted as 'grains per gallon' or 'parts per million' or 'parts per 100,000'. The hardness is generally determined by finding the quantity of a specially prepared soap solution. It is necessary to add to a known quantity of the water in order to establish a permanent lather. To convert parts per million to grains per gallon, divide by 17. A general classification of waters would be:

Type	Hardness	Grains per Gallon
Soft	0 - 49 ppm	0 - 3 grains
Fairly soft	50 -99 ppm	3 - 6 grains
Fairly Hard	100 - 149 ppm	6 - 9 grains
Hard	150 - 249 ppm	9 - 14.5 grains
Very Hard	250 (plus) ppm	14.5 (plus) grains

Heat Loss
A hot body looses heat by the combined effects of conduction, convection and radiation.

Heat Trap Fittings
A device that helps reduce heat transfer from the water heater to the pipes. It contains a thermoplastic ball that seat themselves in place to help restrict heat transfer when hot water is not running. A Teflon ball (heavier than water) seats to trap standby heat on the hot outlet fitting. Similarly, a polypropylene ball (lighter than water) in the cold water inlet fitting floats up to seat during the standby mode.

Heat Unit
A measure of heat energy. In English speaking countries, it is the BTU (British Thermal Unit). In Europe, it is the calorie (also spelled Calorie or Kalorie).

Hertz (Hz)
A measure of frequency. One Hertz equals one cycle per second. 60 cycles AC is also called 60 Hertz AC.

High Altitude
As related to water heaters, the orifice is changed to help aerate the gas supply to the heater so that it will operate properly in areas of higher altitude (thinner air). Standard water heaters are designed to operate safely up to 2,000 ft. Per the requirements of ANSI and the National Fuel Gas Code, the de-rate above this level is 4% per 1,000 feet altitude. Rheem generally de-rates gas products to a 5,000 ft elevation which results in a 20% reduction in BTU input.

High Watt Density Element
The watt density of an element is the amount of heat transferred from any point on the surface of the element of the water. A high watt density element has less surface area of heating element than a low watt density element, but is transferring the same amount of energy into the water.

Input Rate
A measure of heat input to a water heater; BTU's per hour of gas, WATTS per hour of electricity. The higher the input rate, the more hot water it will produce.

Input Rating
The gas-burning capacity of a water heater in BTU's per hour. Water heater input ratings are based on sea level operation and need not be changed for operation up to 2,000 feet elevation. For operation at elevations above 2,000 feet, input rating should be reduced at a rate of 4% for each 1,000 feet above sea level. For instance, a gas heater with a 40,000 BTU input rating installed at 4,000 feet above sea level would have a reduced BTU rating of 33,600 BTU's.

Instantaneous Water Heater
A water heater which has an input rating or at least 4,000 BTU per hour per gallon of stored water.

Intermittent Ignitor
Also referred to as an I.I.D. (Intermittent Ignition device). The ignition system of the residential power vent water heater. This is used to light the pilot during the heating cycle.

Junction Box
The place in electric water heaters where the power supply is connected to the water heater. Water heaters wired for 3-phase operation will require a separate external junction box.

Kilowatt (kW)
A measure of the rate of supply of energy or power and is equal to 1,000 watts. A kilowatt equals 3,412 BTU per hour.

Lifeguard™ Element
A trade marked registered heating element offered by Rheem. The element has a stainless steel outer sheath of INCOLY® 800, the same material found in electric range elements. The LIFEGUARD™ element is a low watt density design and contains a small resistor built into the element to reduce cathodic reaction with the water inside the tank. This effectively will prolong the anode life and protect the tank for a longer period, especially in areas with aggressive water conditions.

Lime Buildup
Mineral deposits usually found in hard water. (See sediment build up)

Lint Screen
Removes lint and dirt from primary air before it enters the primary air opening. Also traps particles on the inlet side of a gas control valve.

Low Nox
Term that refers to natural gas water heaters required in select areas of California which are built with a special burner to help reduce or limit the amount of nitrous oxides (Nox) released during the combustion process.

Low Watt Density Element
The watt density of an element is the amount of heat transferred from any point on the surface of the element of the water. A low watt density element has more surface area of heating element than a high watt density element, but is transferring the same amount of energy into the water. A low watt density element will generally last longer than a high watt density element.

Maintenance Rate (Stand-by losses)
The maintenance rate is the rate which heat or energy has to be supplied to an appliance to maintain its temperature at the required level when the unit is not being used. In the case of a storage heater, it is the heat input required to hold the unit at the required temperature (generally 80°F above ambient on gas heaters and 100°F above ambient on electric heaters). The maintenance rate may be measure in BTU per hour for gas or kilowatts per 24 hours for electricity. The temperature above ambient must always be quoted.

Multiple Heater Installation
This is an installation where a number of heaters are used to supply the total building hot water requirements. The heaters are manifolded together in one location and the installation can be defined as a 'central water heating system'. This is one of the easiest systems to service and maintain. When one heater is being serviced, the remaining heater(s) will continue to supply hot water.

Multi-Watt Element
An element that has the capability to function at two different wattages. The Multi-Watt element offered by Rheem is convertible from 3800 to 5500 watts.

NAECA
National Appliance Energy Conservation Act of 1987... The Federal Law enacted by Congress which sets minimum energy efficiency standards for residential water heaters and other products. Effective with water heaters produced on or after January 1, 1990. NAECA supersedes all previous state and local energy efficiency requirements.

NPT (National Pipe Thread)

Nipples
Can be made of various materials. Used to connect the water heater to the piping system.

Nitrous Oxide
By-product produced in the combustion process of natural gas water heaters.

Off-Peak Metering
Required by some electric utilities to reduce excessive electricity demands during peak periods. Radio controlled or timed meters are the most common method of off-peak metering.

Orifice
Device on the burner assembly that controls the flow of gas to the burner.

Output
The output on a water heater is normally given in gallons per hour at a 100°F temperature rise. It is the quantity of water that the heater will deliver at 140°F, when the cold start temperature is 40°F. All water heaters are stamped with this output rating in gallons per hour.

PVC Venting
3" PVC (or ABS) schedule 40 pipe can be used to vent Power Vent water heaters.

Peak Period
Peak period refers to the time during the day when the water heating system experiences it greatest draw (demand). With the exception of applications that require continuous hot water draw, tests have shown that the peak period of hot water usage will occur once or twice a day in residential applications. Peak periods for commercial applications are dramatically different. A peak period in a school gymnasium shower may occur ever hour!

Phase
For ease of production and distribution, AC is distributed in what is known as 3 phase supply using three active wires and one neutral wire. On a 240/480 volt supply, the voltage between any one active wire and the neutral wire is 240 volts. The voltage between any two active wires is 480 volts.

Pilot Bracket
The means by which the pilot is mounted to the burner. The bracket also holds the thermocouple or sensor in fixed relationship to the pilot burner ports

Pilot Light
The flame designed to be continuously lit that ignites the main burner when the thermostat demands heat.

Pilot Orifice
A cup shaped part in the pilot which contains precisely sized openings which control the amount of gas to the pilot.

Pilot Ports
The openings through which the gas or gas and air mixture passes before burning.

Pipe Losses

Certification tests of a water heater are carried out on an isolated heater - not connected to hot or cold water lines. (Note: Stand-by losses determined do not apply to the installed heater.) Additional losses take place when installed. These are called 'pipe losses' and are made up of:

1) Conduction of heat along the hot and cold water pipes. This effect is generally limited in extent.
2) Convection of water in the hot water line above the heater. This effect can be quite large, but can be reduced considerably by introducing a 'heat trap' in the hot water line at the heater.
3) Radiation from the hot water pipes and fittings. These are reduced by insulating.
4) Between uses, the water in the hot water line gets cold. This has to be run off before hot water can be drawn from the fixture.

The overall effect is reduced by the following means:

1) Fit a heat trap in the hot water lines.
2) Use small diameter pipe.
3) Use short runs of pipe.
4) Insulate hot water pipes, particularly the section nearest the heater.

Pre-heated Water

This is the water that has been heated in one water heater before going to another water heater to be raised to an even higher temperature. For instance, in restaurants there will often be one heater that will heat incoming water to 140°F (general purpose water). This pre-heated water will go into a booster heater to be heated to 180°F for the sanitizing rinse cycle of some dish-washers.

Pressure Reducing Valve

A valve which automatically reduces inlet water pressure to a specified value at its outlet, under static cold water conditions.

Primary Air Intake

The hole or opening through which air is drawn to mix with a gas for burning.

Polyurethane Foam Insulation

The foam used to insulate the water heaters for high energy efficiency.

POWERGLO™

Name given to ignition system on Rheem power vent products.

Power Vent

Gas water heater that uses a blower to vent the flue gases out of the heater. The power vent water heater can be vented horizontally rather than vertically as required by conventional atmospheric water heaters. This allows you to vent directly outside through a wall. May also refer to an after-market blower kit that may be attached to a natural draft gas heater.

R-Foam™ Insulation
Rigid polyurethane foam insulation has been proven to be a more effective insulating material in reducing the standby loss through the jacket than previously used fiberglass. Generally, with regard to electric heaters, the more insulation, the more efficient the heater becomes. Today's foam material utilizes an HCFC blowing agent which is environmentally friendly.

R-Tech™ Anode
Patented anode design that reduces current draw and results in a longer anode life. Works in conjunction with the resistered heating element and is also effective with aggressive water areas which produce hydrogen sulfide (smelly water).

R-Value
A measure of insulating value. Generally, the higher the R-Value, the greater the resistance to heat loss.

Recovery
Gallons of water per hour a water heater can raise the temperature of by 90°. Generally, the higher the BTU input rate, the faster the recovery rate is. Recovery rates are also a component of the First Hour Rating.

Recovery Efficiency %
The percent of heat value transferred from its fuel source. The better the recovery efficiency, the more energy efficient a water heater is. Electric water heaters are assumed to be 98% efficient as virtually all the electric energy is transferred to the water. Gas water heaters can have recovery efficiency rates of 76% up to over 90%. This is only one measure of efficiency... the ENERGY FACTOR is the best overall measure of a water heaters efficiency.

Recovery Rating
All certified commercial water heaters are required to be stamped with this information. It is the quantity of water obtained by dividing the manufacturer's input rating in BTU per hour by 1100 BTU per gallon. This is based on a 100°F temperature rise, 75 percent thermal efficiency and a nominal specific heat for water of 8.25 BTU per gallon per °F.

Resistored Element
Element available from Rheem that has a small resistor built into the element to reduce cathodic reaction with the water inside the tank. ALL electric water heater elements supplied by Rheem are resistered.

Roof Jack Vent
Used with manufactured housing gas water heaters, the roof jack is the venting system from the water heater to the outside air. It is adjustable to accommodate different roof thickness and pitches. A roof jack supplied by Rheem is required on any mobile home direct vent water heater.

SCAQMD (South Coast Air Quality Management District)
Required by the Environment Protection Agency to limit the amount of nitrous oxides (Nox) emissions from residential natural gas water heaters up to 75,000 BTU. The SCAQMD requirements are enforced in various areas of California.

Safety Shut-off Valve
A device on a gas appliance which shuts off the gas supply to the appliance to prevent a hazardous situation. A flame failure safety shut off (or safety pilot) operates when the actuating flame becomes extinguished. A "100%" shutoff valve cuts off all gas including main and pilot burners. Other types may cut off only the supply to main burners.

Sanitizing Water (180°F)
Sanitization means the effective bactericidal treatment of dishes and utensils. Sanitization is based on the principle of heat build up at the surface of dishware. Temperatures at the surface of the clean dishes must be hot enough (180°F) in the final rinse cycle of dishwashers to complete effective sanitation, that is, destruction of harmful microorganisms or germs. Further, 180°F rinse temperature effectively air dries chinaware, glassware and utensils.

Sediment Build-Up
Sediment or scale build up is one of the most serious problems caused by hard water mineral deposits. These deposits, commonly called lime build up, may clog water pipes, collect in the bottom of water heaters and collect on electrical heating elements immersed inside the water heater. The build up on the electrical heating elements will insulate the elements and reduce their efficiency. Eventually, the elements will fail. If this sediment is allowed to remain in the tank, it will gradually sink to the bottom where it will harden into an insoluble scale. This will lead to a reduction in the efficiency of the heater, clogging of the drain valve and may lead to eventual tank failure.

Self Contained Commercial Storage Heater
A water heater that heats and stores water at a thermostatically controlled temperature for delivery on demand. Input rating above 75,000 BTUH. They are ideally suited for applications where there are several short peak period draws. Basically they can re-heat a volume of water equal to their storage capacity 1 ½ to 2 ½ times each hour.

Simultaneous Wiring
A double element heater may be wired for simultaneous operation. This means both elements will heat at the same time during the initial fill or during heavy water draws.. This can be useful when there is a requirement for a rapid recovery time. This does not mean that both elements will always fire simultaneously. During normal water draws, only the bottom element will fire, similar to a non-simultaneous heater.

Smelly Water
Hydrogen sulfide (H_2S) is a gas present in some waters. There is never any doubt when it is present due to its offensive '"rotten egg" odor in concentrations as low as one part per million. Hydrogen sulfide is present in the incoming cold water supply and normally found only in

ground water. Hydrogen sulfide gas can produce a favorable condition for the growth of organisms referred to as 'sulfate reducing bacteria'. This favorable condition is enhanced with the application of heat, such as in a hot water heater. The smell is most noticeable with the first hot water draw in the morning or maybe when you get home from work.

Stacking
Occurs when frequent small draws of water create different temperatures throughout the tank resulting in increased peak temperatures at the top of the tank. ANSI /AGA certification testing sets specific limits as to the temperature differential between the bottom and top of the tank. One of the benefits of The EverKleen™ system is that it greatly reduces peak temperatures and stacking effects, thus increases first hour deliverability.

Stand Kit
Raises gas water heater 18" above floor level as required by many codes.

Standby Loss
The heat energy lost during standby mode operation of the water heater. Most standby loss in gas water heaters occurs through the flue system. Electric water heaters standby loss occurs through the exterior jacket.

Storage Water Heater
A water heater incorporating a storage tank such that water can be heated whether water is flowing through the heater or not (as contrast to instantaneous Water Heater).

System Temperature
This refers to the temperature of the water actually in the water heater, i.e., 140°F, 180°F, 180°F, etc. This is as opposed to the inlet temperature (water coming into heater) or the use temperature (the water as it is used from the heater, either at heater temperature or mixed with cold).

Temperature
This is a measure of "hotness" or "coldness" or the ability to transmit heat outward or receive heat inward. Heat and Temperature can be compared to water and heights. As water will flow naturally down hill, so heat flows from the higher temperature to the lower. The flow in the reverse direction requires the application of energy in some way. Temperature is normally measured in Fahrenheit degrees (°F) but in scientific literature it may be quoted as Celsius (°C).

Temperature and Pressure (T&P) Relief Valve
Safety device that vents extreme pressure and excessively hot water outside the tank to prevent tank rupture and explosion. Commonly called the T&P valve, it is designed to operate at approximately 150 PSI or 210° F.

Temperature Rise
The difference in temperature between the desired hot water and the incoming cold water, expressed in degrees Fahrenheit. If the desired temperature at the faucet is 120° F and the

incoming cold water is 70° F, the required temperature rise is 50° F (120° - 70° = 50°). Temperature rise is the number of degrees Fahrenheit that the water must be raised either from the inlet water temperature or a pre-heat water temperature. In short, the temperature rise is the difference between existing water temperature and desired water temperature.

Thermal Expansion

When water is heated it expands. However, water is not compressible. Therefore, the expanded water along with a "closed" water system creates a dangerous pressure in the water heater and system piping. The "closed" condition is usually due to a check valve or "backflow preventer" installed in the system. This pressure will cause the T&P valve to open at approximately 150 PSI. The T&P, however, is not designed to open on a regular basis and could eventually fail. If the T&P does not function properly, there is a potential safety hazard. Expansion tanks are the most widely used device to deal with the effects of thermal expansion. On being heated, all solids and liquids expand, the exact amount of expansion varying with different materials. The expansion of metals is used to operate solid stem thermostats where two materials of different expansion characteristics are coupled. The different expansion rates of the two materials can operate a valve or switching mechanism. The expansion of liquids on heating has three effects. First, there is an increase in volume. This increase has to be allowed for by provision of a relief valve which allows the extra volume of water to leave the storage cylinder. The second effect is that expansion with heat makes the liquid less dense, making heated water lighter than cold water, and causing it to rise by means of "convection currents". This effect is used in circulating water heaters which are used with storage tanks fitted with hot and cold connections. In these installations the hot water rises from the heating unit up the hot outlet to the storage tank, and cold water flow from the tank down the cold inlet to the heating unit. The third effect is that hot water, being less dense than cold water, will float on top of cold water without much mixing for some time. This principle is used in all displacement water heaters and allows cold water to enter the tank (while hot water is taken from the top) without mixing with the hot water.

Thermal Input

The rate at which heat energy is supplied to an appliance. The Nominal Thermal Input (N.T.I.) is the basic or nominal input at which the unit was tested and to which published performance figures apply. For gas units, the N.T.I. should be measured in BTU per hour. Orifice size supplied and published gas pressure at the orifice give N.T.I. on one particular gas only, and adjustment may be needed on other gas types. Electrical appliances are rated in Kilowatts or Watts, (1 Kilowatt equals 1000 watts). Again this applies only to the voltage for which the element is designed.

Thermocouple

Bi-metal device that, when heated by the pilot flame, carries millivolt current to the magnet assembly inside the gas control valve. Typically seen on residential applications

Thermopile

Serves same function as a thermocouple; however, it contains a group of thermocouples built in 'series' and has a larger diameter than a thermocouple. Typically seen on commercial applications.

Thermostat
A device which automatically maintains a predetermined temperature in an appliance. Thermostats can be of the "immersion" type where the actuating components are immersed in the fluid whose temperature is to be controlled or of the "surface mounted" type where the actuating components sense the fluids temperature through the wall of the tank. Thermostats can be "snap acting" i.e. operate from full-on to full-off and vice versa or "modulating" operating gradually from full-on to a minimum by-pass flow and vice versa. Some thermostats combine a modulating function from full-on to low-fire then snap action to off. The "differential" of a snap action thermostat is the temperature difference between the opening and closing functions.

Transformer
Used in PowerVent water heaters and Universal™ commercial gas water heaters to activate the electrical components.

Two Temperature System
This is a system that uses one heater to supply two different water temperature requirements with the use of a mixing valve. The way it works is that the application requiring the hottest water is fed directly from the heater, while water for the lower temperature application goes through a mixing valve to be combined with cold water to achieve the desired lower temperature. This is most often found in food service applications.

U.B.C. (Uniform Building Code)

U.L. (Underwriters Laboratory)
An independent laboratory for testing and listing products which meet standards set by UL and the American National Standards Institute.

U.L. 307b
The standard which govern the Direct Vent Mobile Home product

Unvented
As applied to most gas appliances, this means that the unit is not connected to a secondary flue. As applied specifically to water heaters this means that there is no open exhaust or vent pipe in the hot water system open to atmosphere at all times.

Use Temperature
This is the temperature of the water as it is actually used. For instance, water for showers may be stored in the heater at 140°F but is mixed with cold near the point of use to arrive at use temperature of 95°F to 110°F.

Vacuum Switch
Or pressure switch. Used in power vented water heaters. The vacuum switch verifies that the vent motor is running, after which gas is allowed to flow to the main burner.

Volts (V)
The voltage is a measure of the electrical pressure between two conductors. Open circuit voltage is the voltage measured between two conductors when no appliance or other load is connected to them. Closed circuit voltage is the voltage as measured across the terminals of an appliance with the appliance is turned on and is operating. Generally speaking, the closed circuit voltage will be lower than the open circuit voltage.

Water Hammer
A loud pounding usually caused by high water pressure when a faucet is turned off or washer valve is closed.

Watts
A measure of the rate of consumption of energy. Watts are calculated from volts and amps (single phase only) as follows: Watts = volts x amps.

Weeping T&P
The Temperature and Pressure relief valve opening due to high pressure (150 PSI) or high temperature (210°F).

N O T E S

N O T E S

N O T E S

Rheem® Water Heaters
Ruud® Water Heaters
2600 Gunter Park Drive East
Montgomery, AL 36109-1413

1-800-HEATER3
www.rheem.com

PRINTED IN U.S.A. 08/02 WP FORM NO. SVC100 REV. 1